APPENDIX B

PROPOSED MARINA DESIGN FEATURES

Contents

Appendix	Description	Number of Pages
B-1	No-Action Alternative and Alternative 1 Design with Topography and Bathymetry	1
B-2	No-Action Alternative and Alternative 1 Harbor Plan with Anchors and Shoreside Cable Points	1
B-3	Alternative 2 Design with Topography and Bathymetry	1
B-4	Alternative 2 Harbor Plan with Anchors and Shoreside Cable Points	1
B-5	Winch and Shore Column Design Details	1
B-6	Elevation View of Typical Dock with Anchorage	1
B-7	Standard Details for Docks, Anchors, and Winches	1
B-8	Standard Details for Gangways and Roof Structures	1
B-9	Alternative 3 Design on Bathymetric Base Map	1
B-10	Alternative 3 Harbor Plan for White Bluff Marina	1
B-11	Alternative 3 Parking and Utilities for White Bluff Marina on Topographic Base Map	1
B-12	Alternative 3 Harbor Plan with Lakeside Anchors and Shoreside Cable Points	1
B-13	Alternative 3 Wave Attenuator Design Details	1

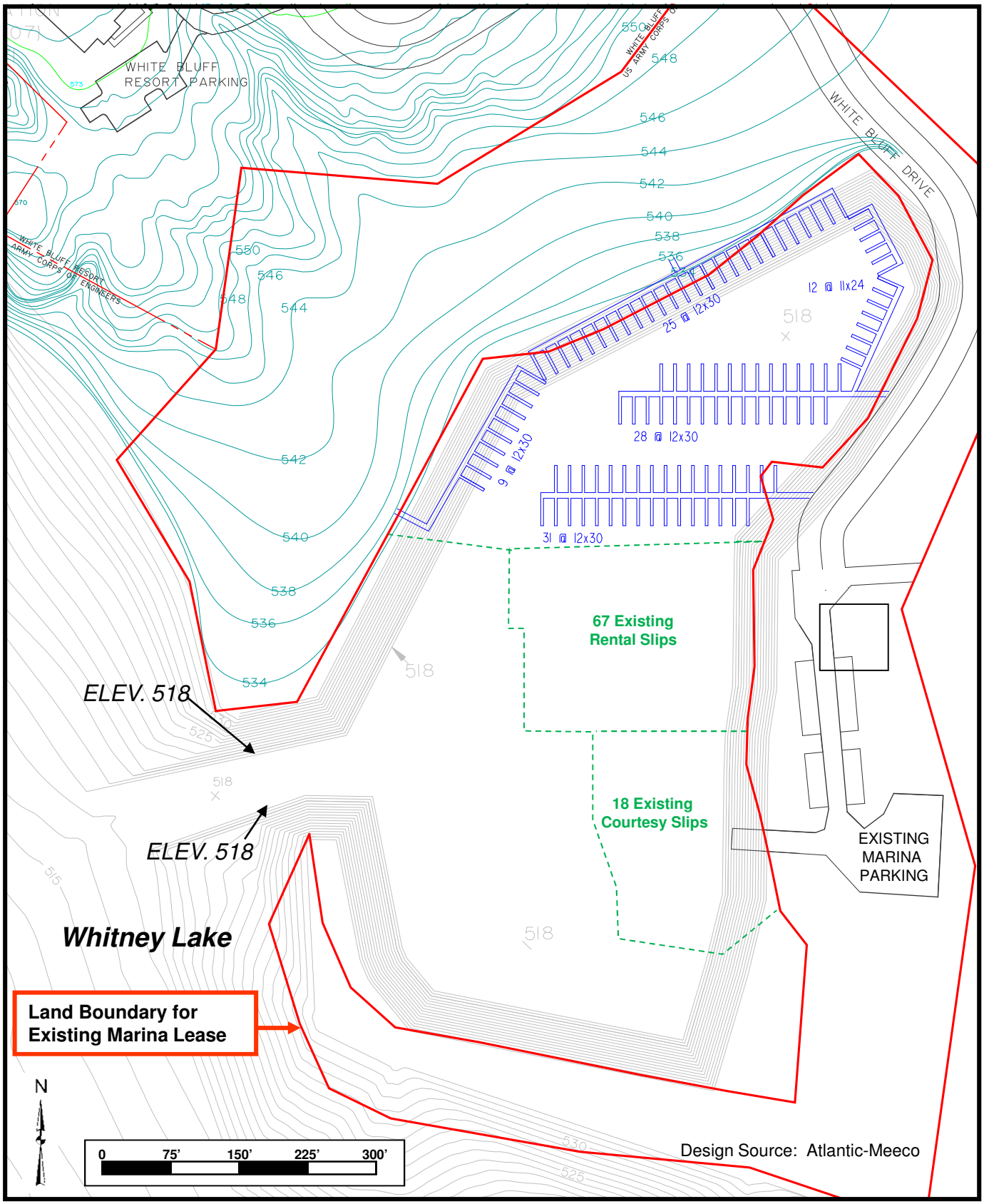

Appendix B-1. No-Action Alternative and Alternative 1 Design with Topography and Bathymetry

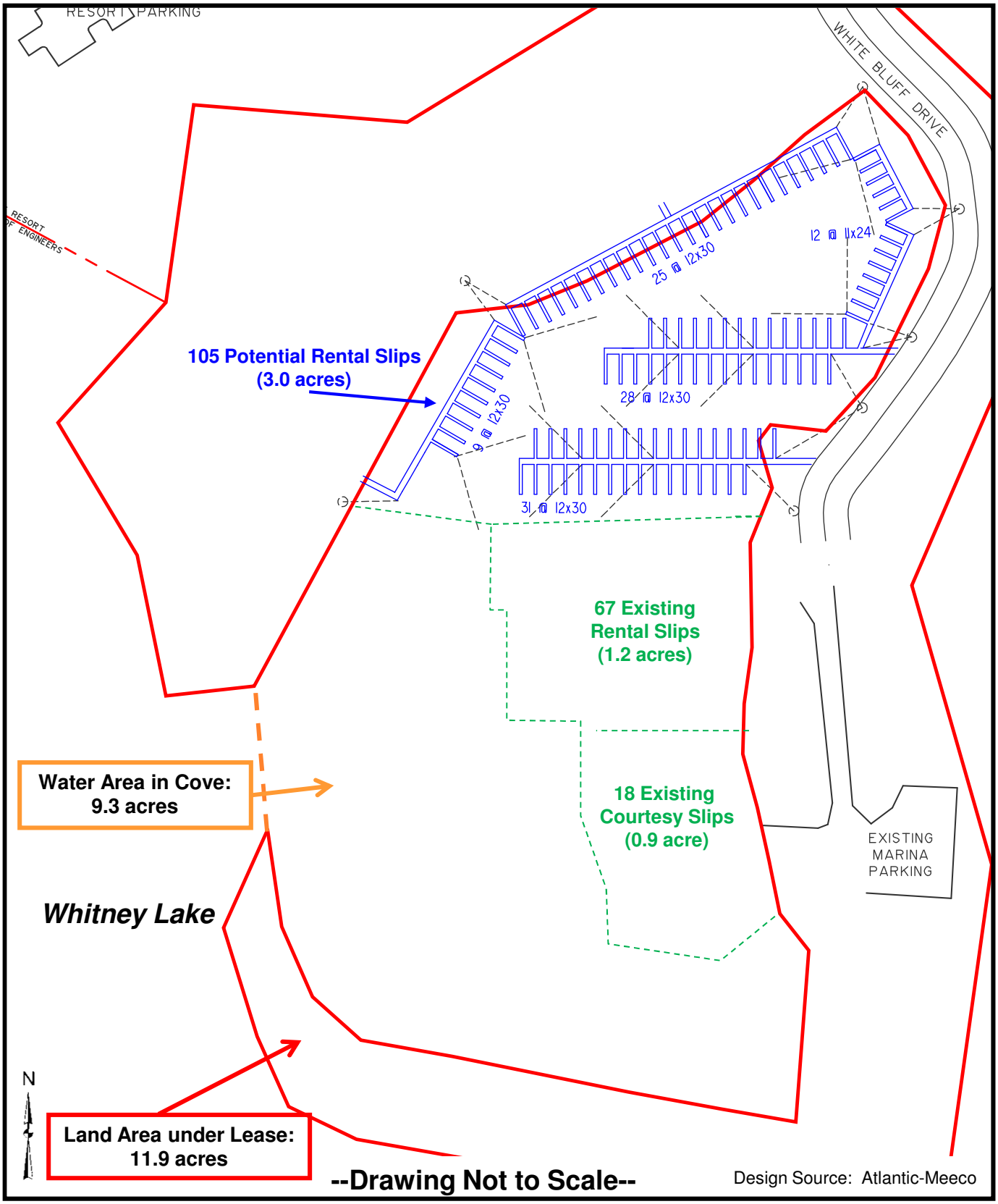

Appendix B-2. No-Action Alternative and Alternative 1 Harbor Plan with Anchors and Shoreside Cable Points

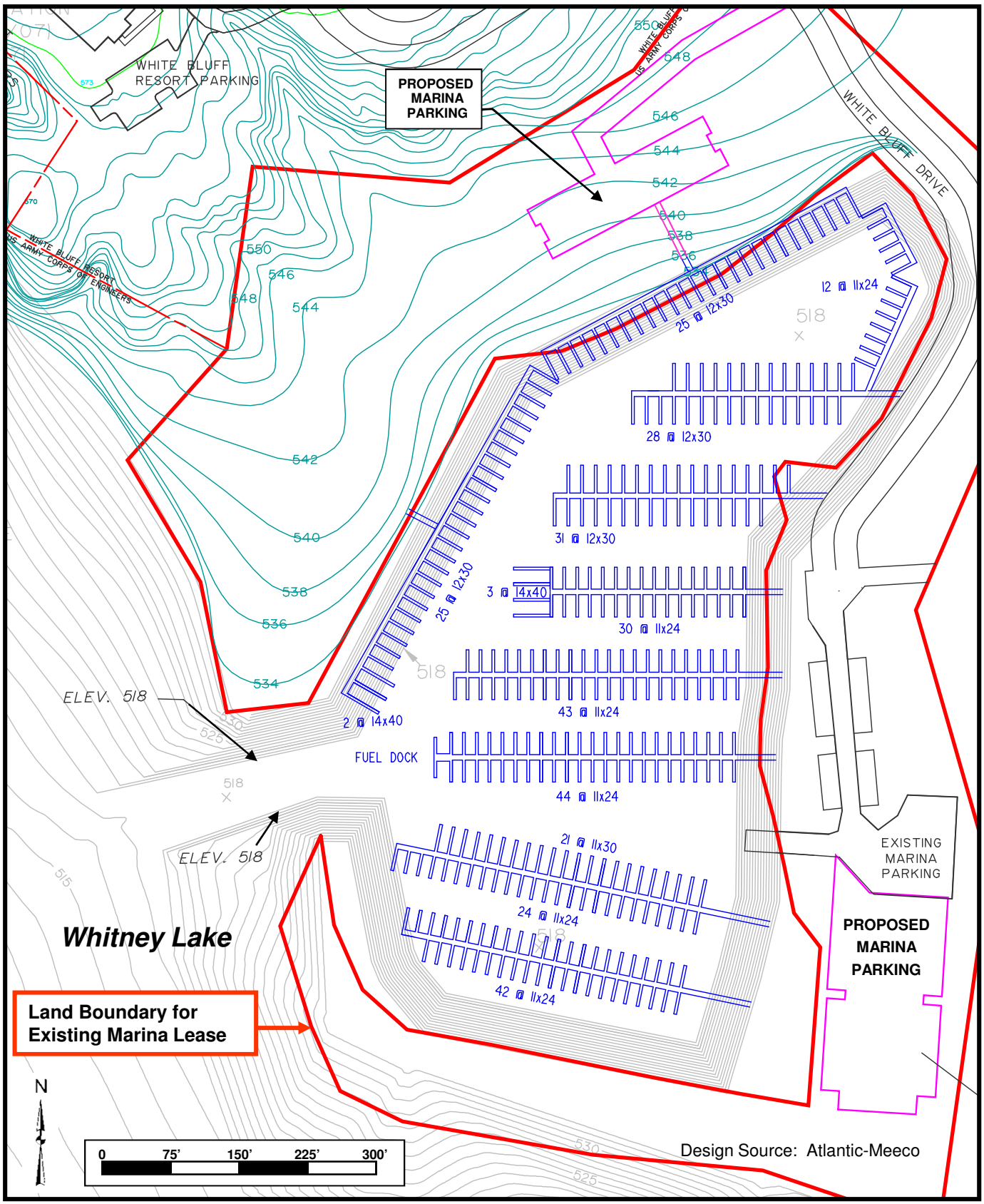

Appendix B-3. Alternative 2 Design with Topography and Bathymetry

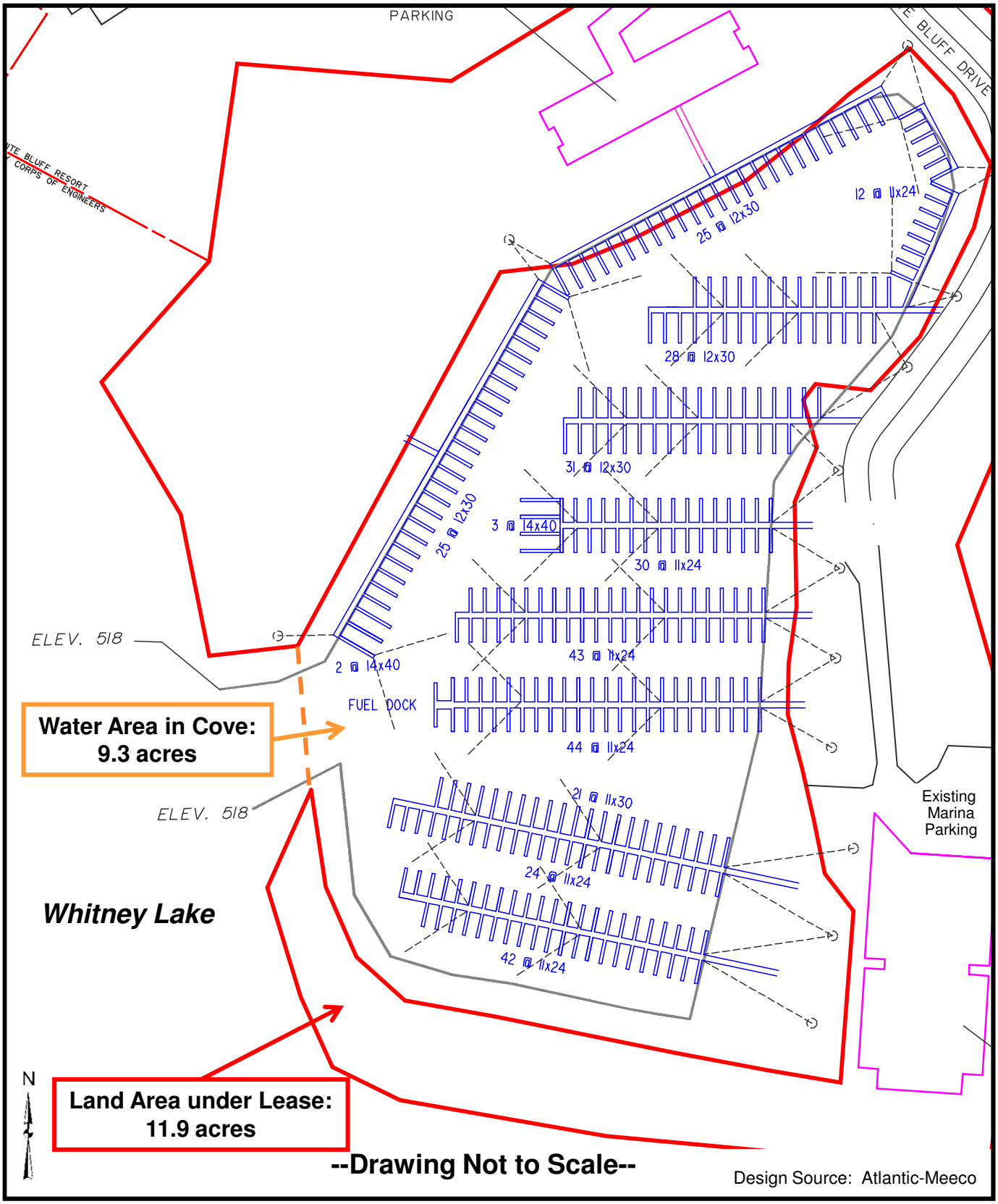

Appendix B-4. Alternative 2 Harbor Plan with Anchors and Shoreside Cable Points

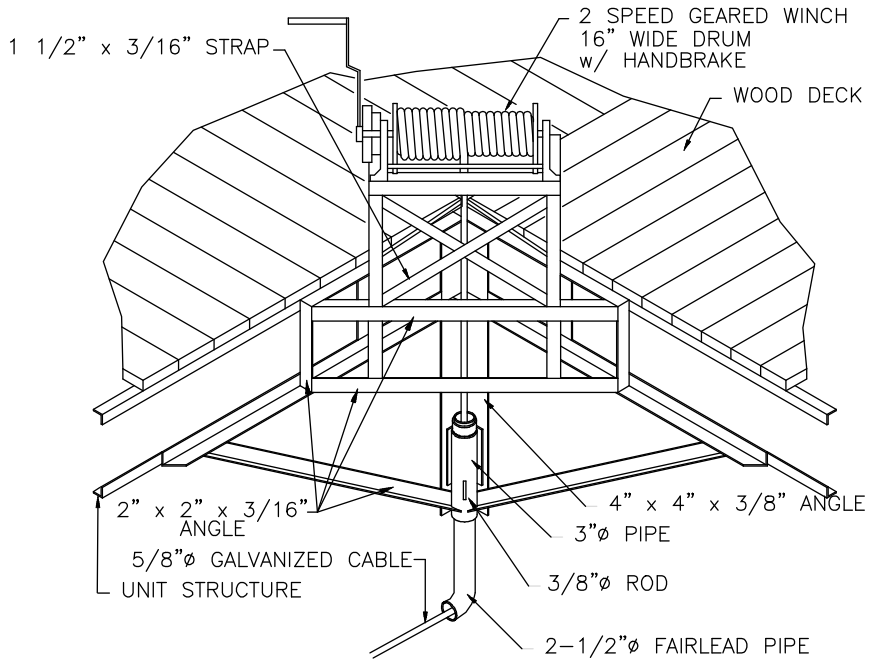

WINCH & FRAME

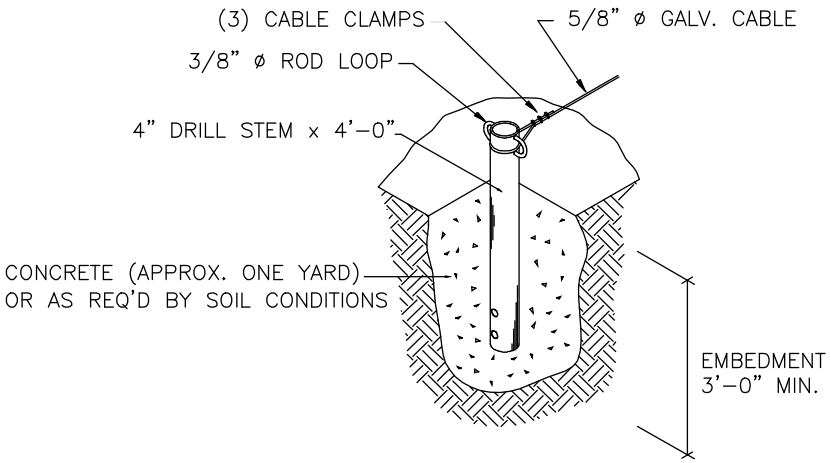

SHORE COLUMN

--Drawings Not to Scale--

Design Source: Atlantic-Meeco (2007)

Appendix B-5. Winch and Shore Column Design Details

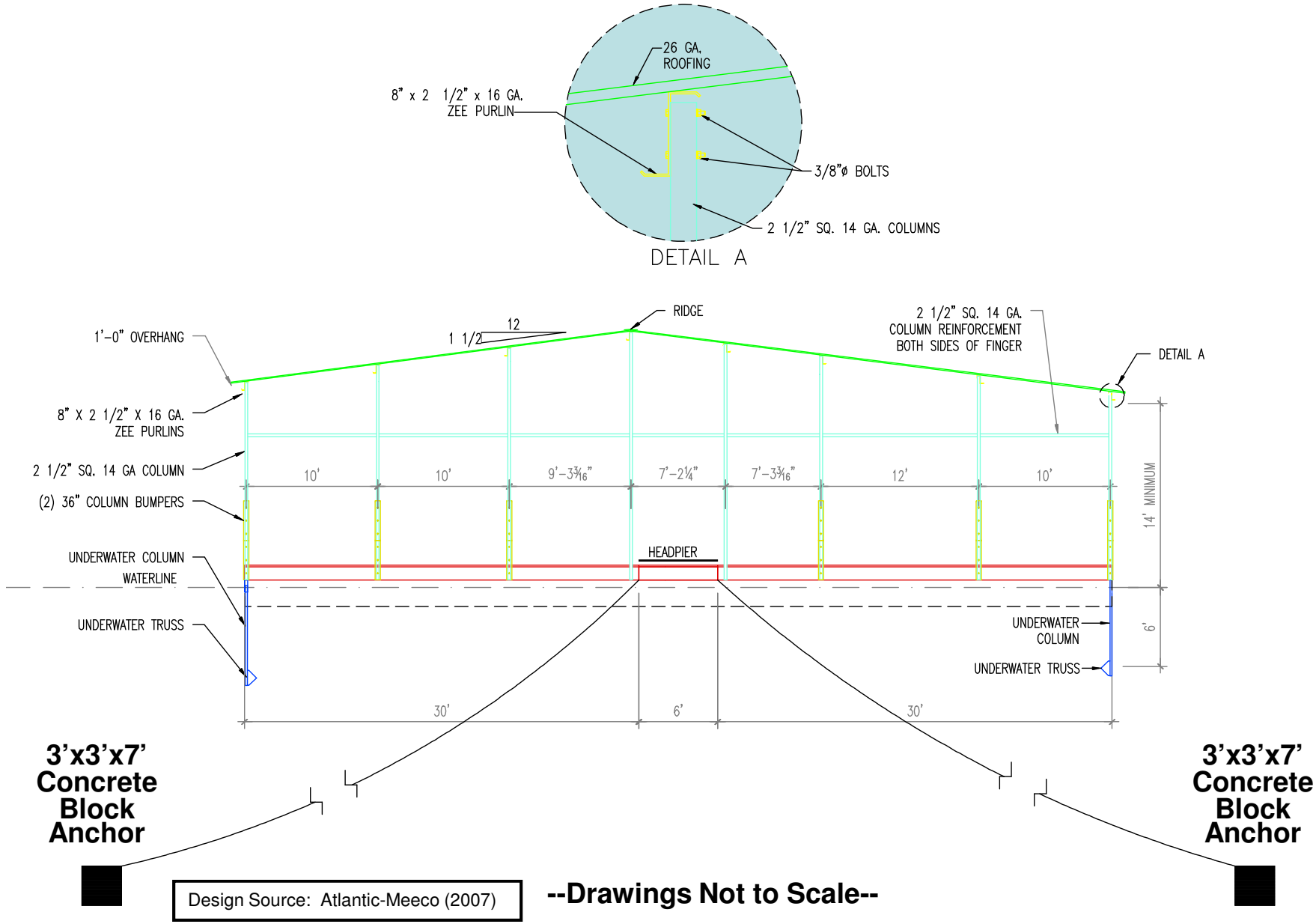

Design Source: Atlantic-Meeco (2007)

--Drawings Not to Scale--

Appendix B-6. Elevation View of Typical Dock with Anchorage

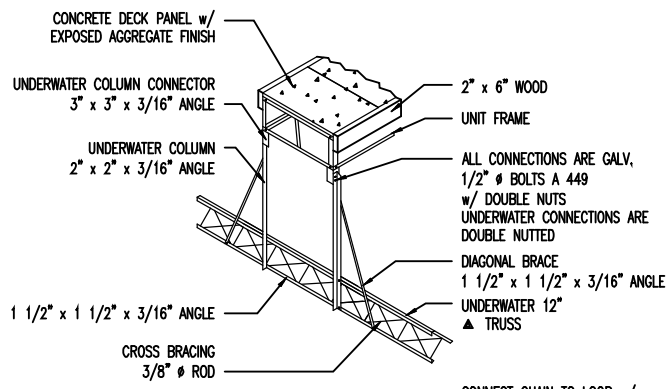

1 UNDERWATER TRUSS

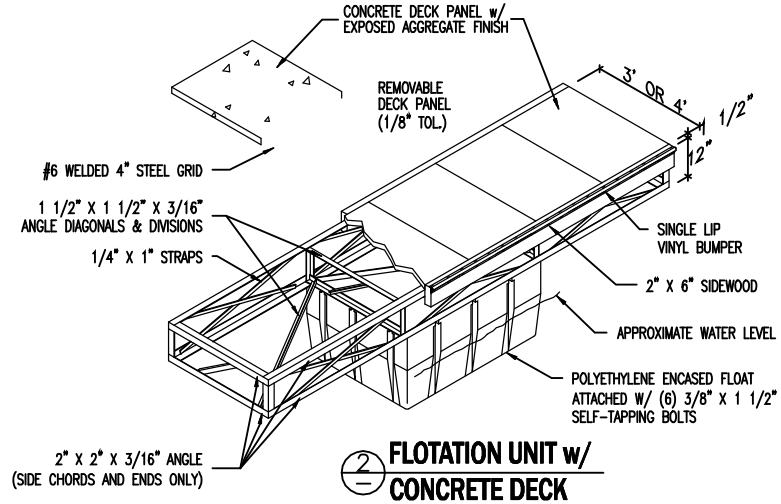

2 FLOTATION UNIT w/ CONCRETE DECK

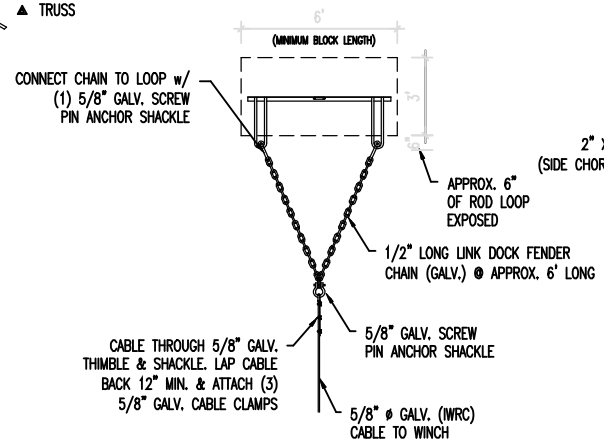

4 BLOCK ANCHOR*

* Note: Block anchor detail above has been inverted from the actual configuration.

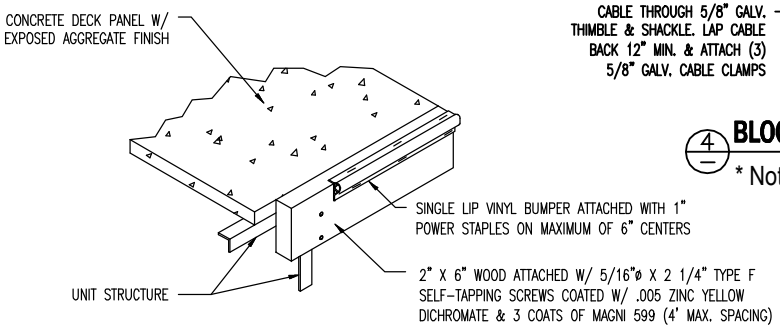

3 2" x 6" SYP SIDEWOOD w/ SINGLE LIP VINYL

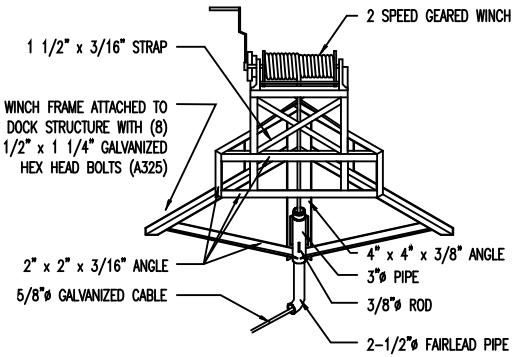

5 WINCH AND CABLE ANCHORAGE

--Drawings Not to Scale--

Design Source: Atlantic-Meeco (2007)

Appendix B-7. Standard Details for Docks, Anchors, and Winches

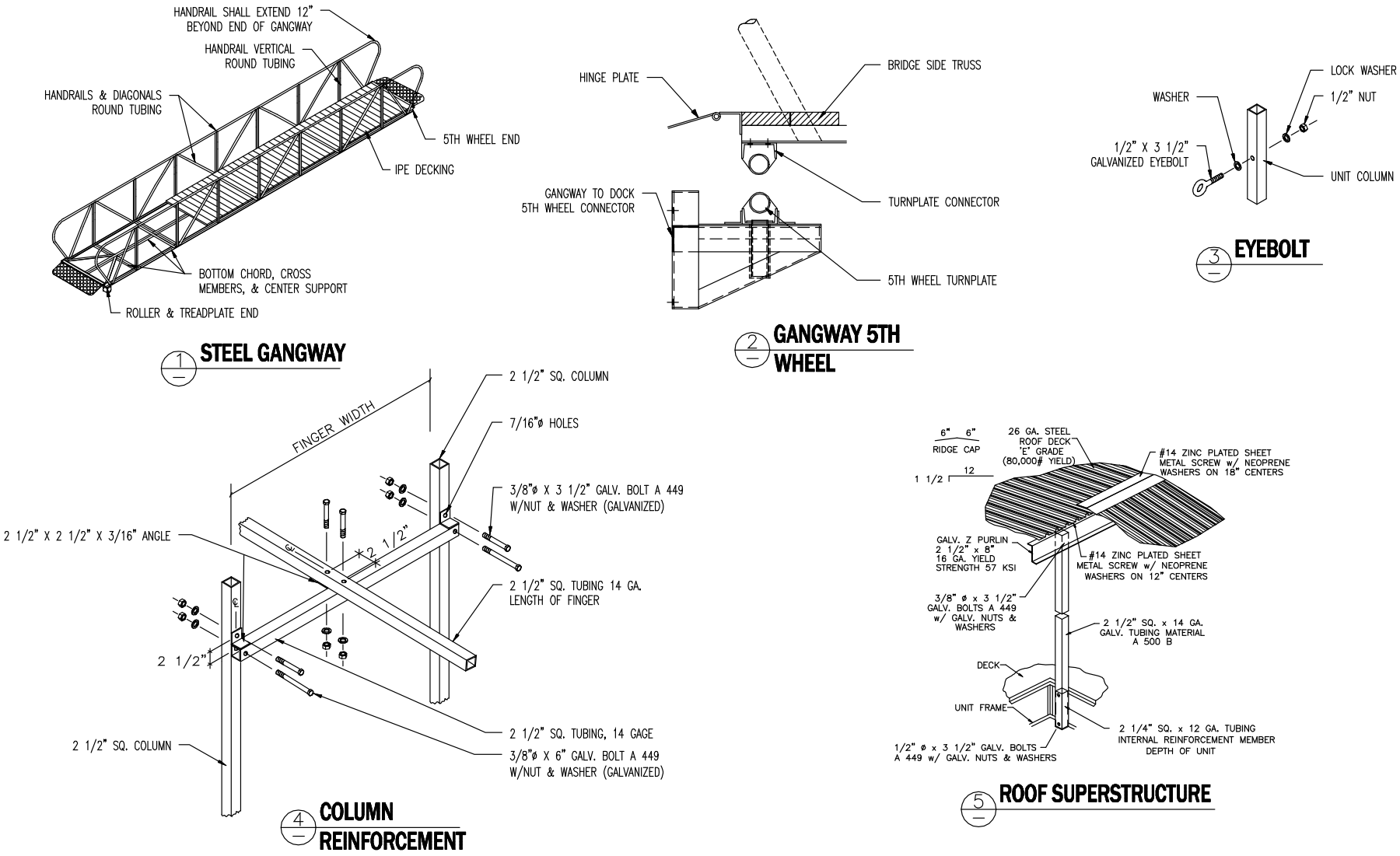

--Drawings Not to Scale--

Design Source: Atlantic-Meeco (2007)

Appendix B-8. Standard Details for Gangways and Roof Structures

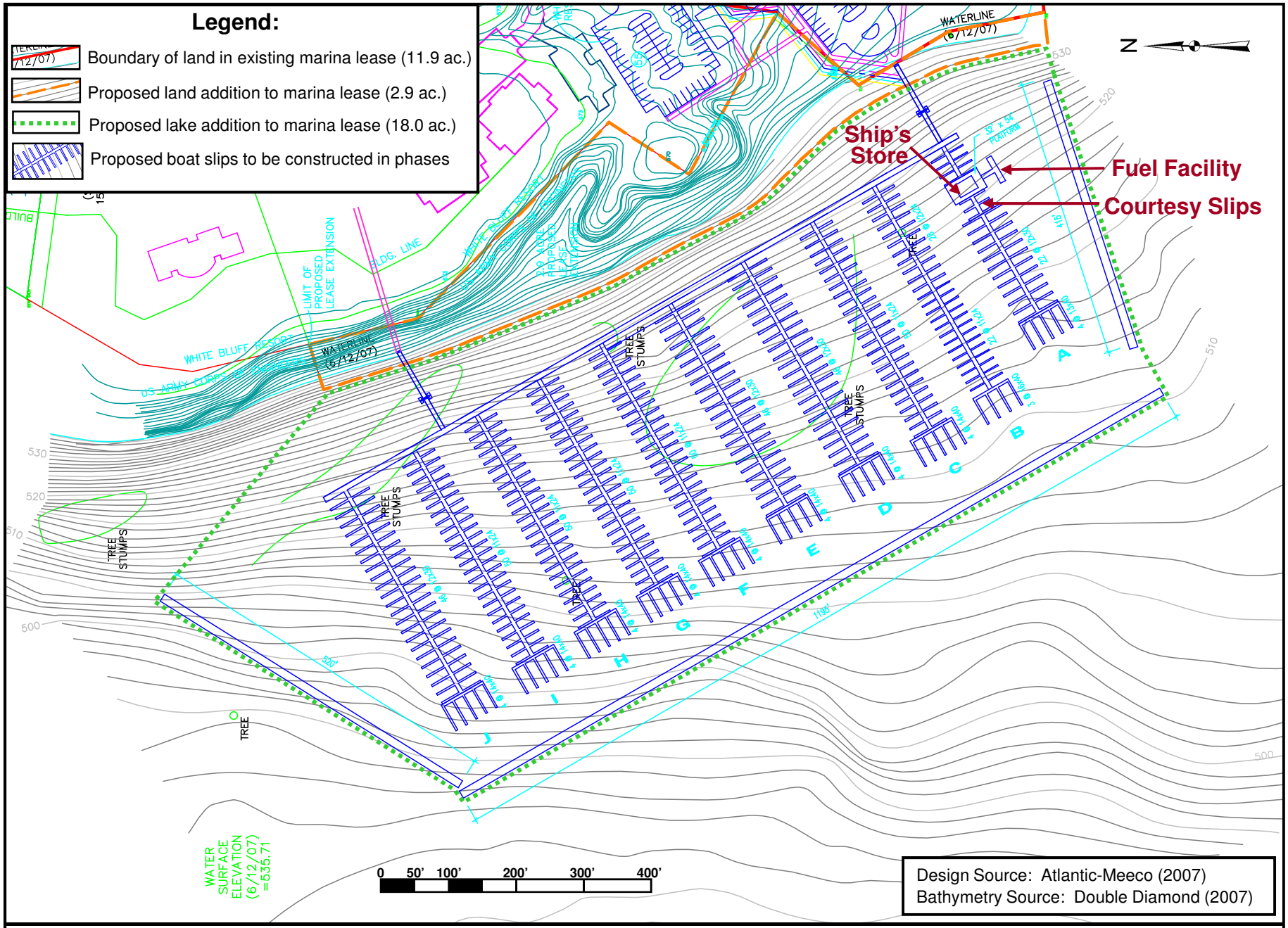

Appendix B-9. Alternative 3 Design on Bathymetric Base Map

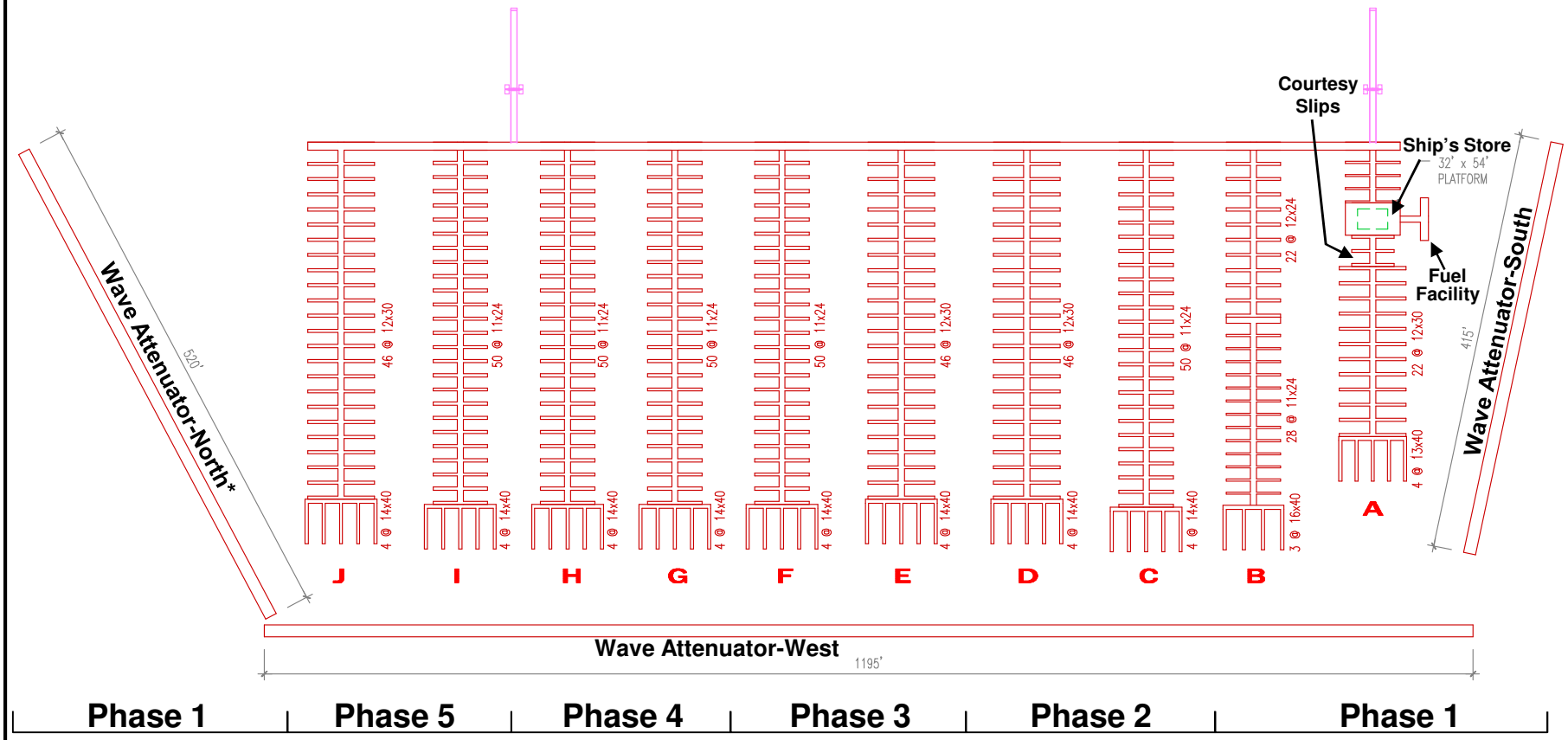

Phase 1	Phase 5	Phase 4	Phase 3	Phase 2	Phase 1

* Wave Attenuator-North, initially adjacent to Phase 1 docks, moves north with phased expansion units.

--Drawing Not to Scale--

Design Source: Atlantic-Meeco (2007)

Appendix B-10. Alternative 3 Harbor Plan for White Bluff Marina

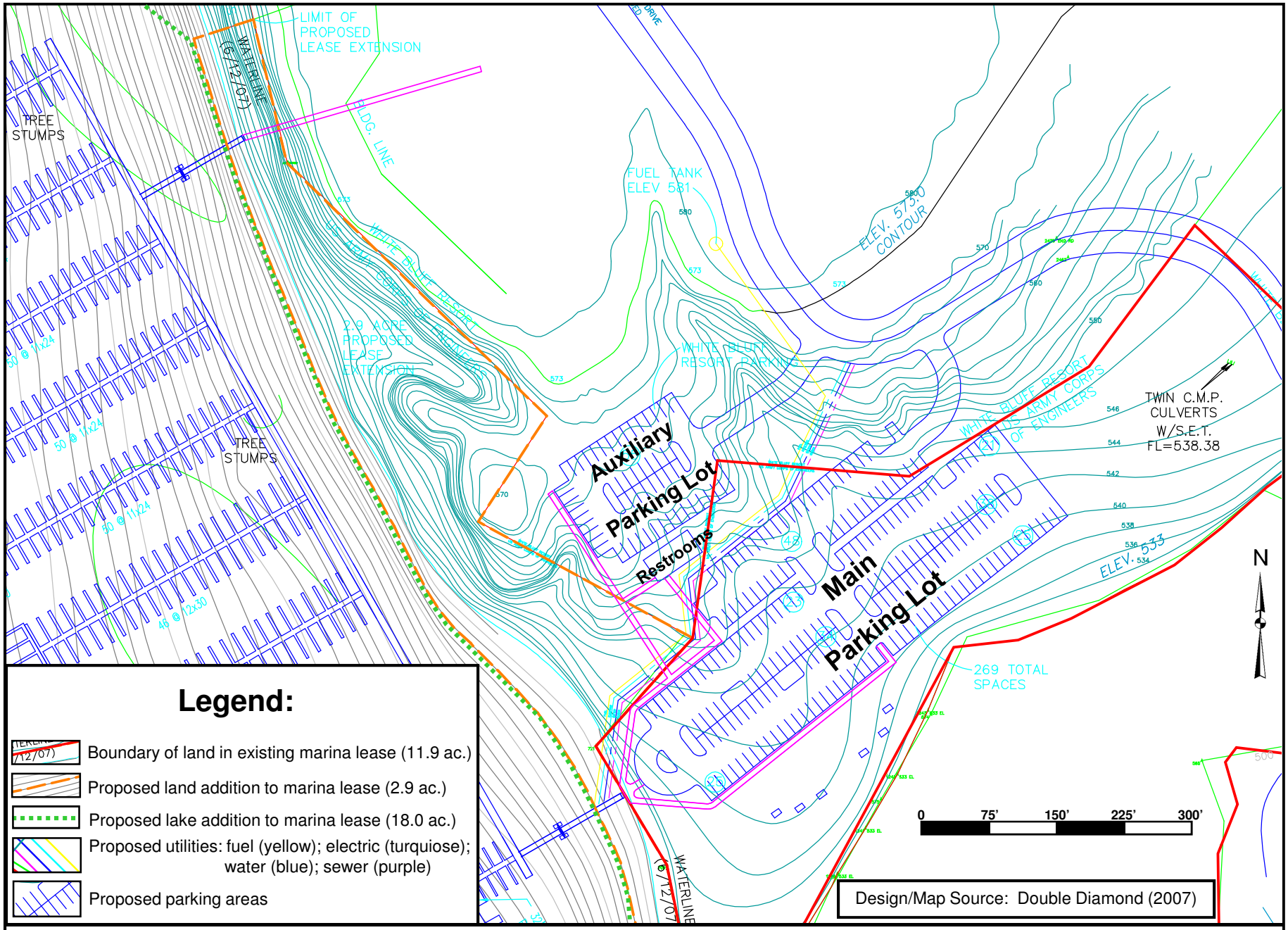

Appendix B-11. Alternative 3 Parking and Utilities for White Bluff Marina on Topographic Base Map

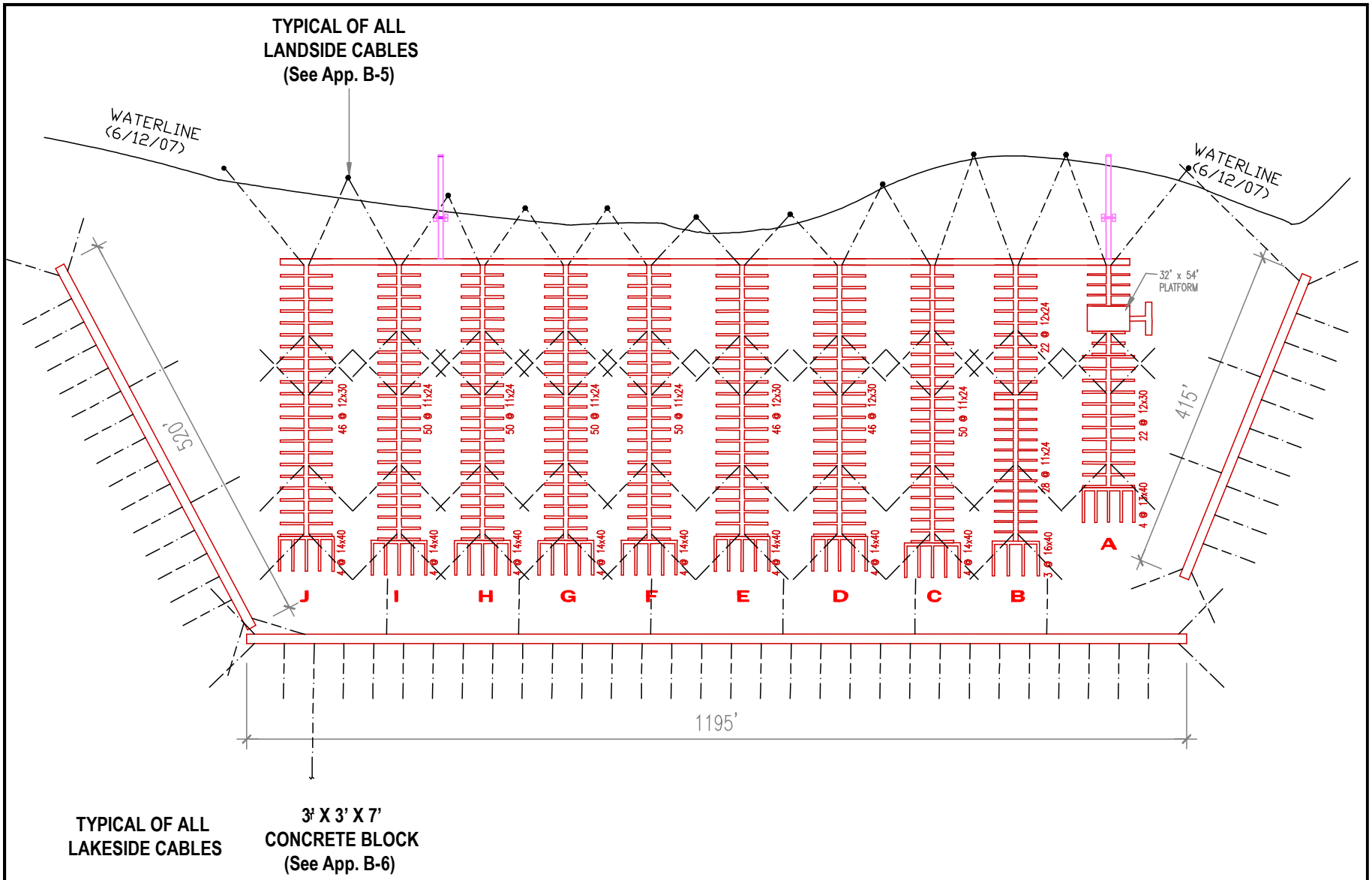

--Drawing Not to Scale--

Design Source: Atlantic-Meeco (2007)

Appendix B-12. Alternative 3 Harbor Plan with Lakeside Anchors and Shoreside Cable Points

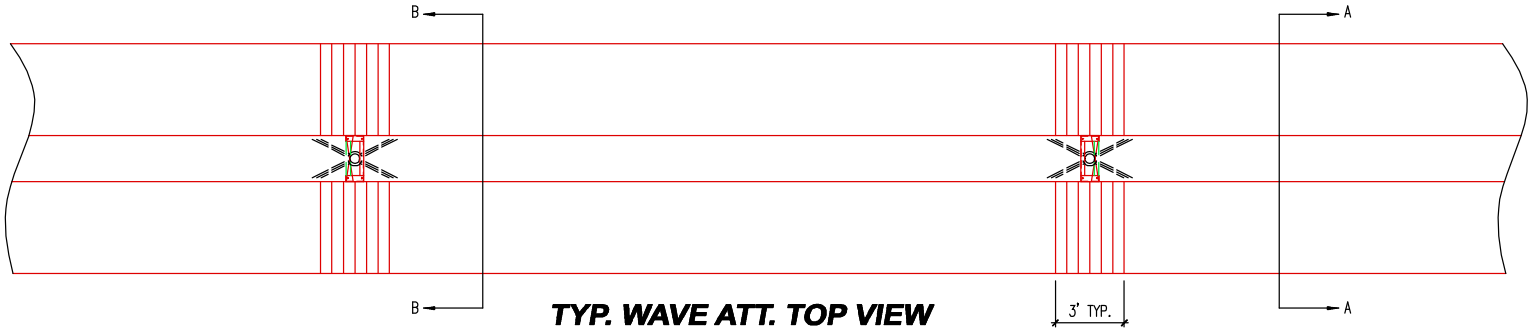

TYP. WAVE ATT. TOP VIEW

N.T.S.

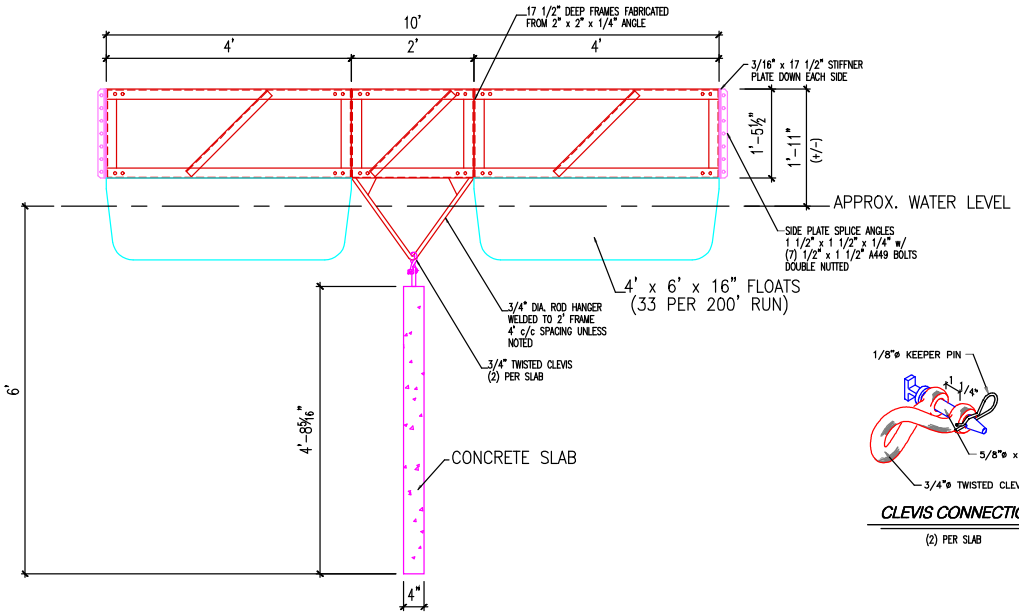

SECTION A @ HANGER ROD

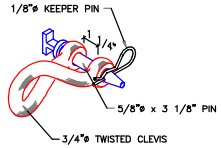

CLEVIS CONNECTION

(2) PER SLAB

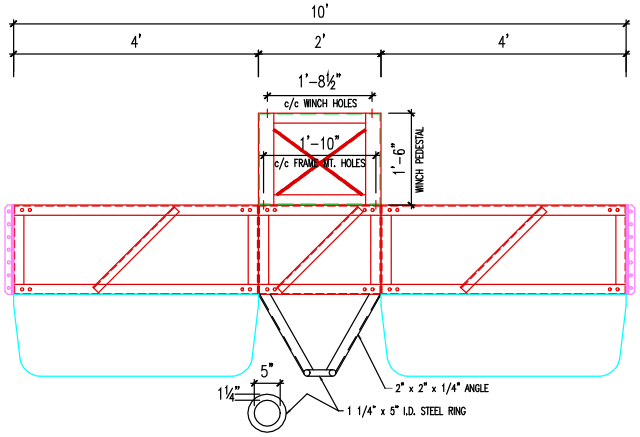

SECTION B @ WINCH FAIRLEAD

--Drawings Not to Scale--

Design Source: Atlantic-Meeco (2007)

Appendix B-13. Alternative 3 Wave Attenuator Design Details