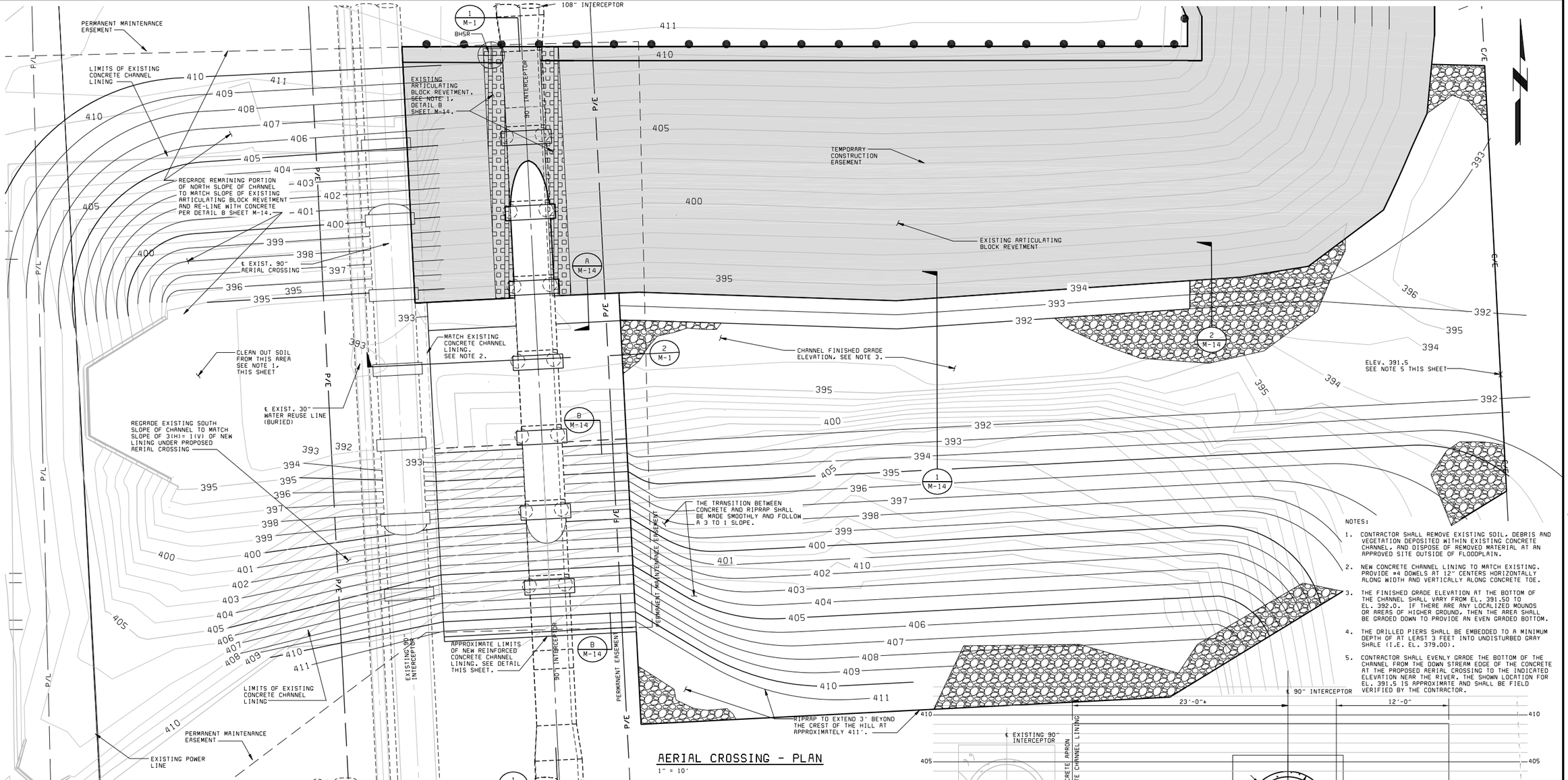

AERIAL CROSSING - PLAN

1" = 10'

NOTES:

1. CONTRACTOR SHALL REMOVE EXISTING SOIL, DEBRIS AND VEGETATION DEPOSITED WITHIN EXISTING CONCRETE CHANNEL, AND DISPOSE OF REMOVED MATERIAL AT AN APPROVED SITE OUTSIDE OF FLOODPLAIN.
2. NEW CONCRETE CHANNEL LINING TO MATCH EXISTING. PROVIDE #4 DOWELS AT 12" CENTERS HORIZONTALLY ALONG WIDTH AND VERTICALLY ALONG CONCRETE TOE.
3. THE FINISHED GRADE ELEVATION AT THE BOTTOM OF THE CHANNEL SHALL VARY FROM EL. 391.50 TO EL. 392.0. IF THERE ARE ANY LOCALIZED MOUNDS OR AREAS OF HIGHER GROUND, THEN THE AREA SHALL BE GRADED DOWN TO PROVIDE AN EVEN GRADED BOTTOM.
4. THE DRILLED PIERS SHALL BE EMBEDDED TO A MINIMUM DEPTH OF AT LEAST 3 FEET INTO UNDISTURBED GRAY SHALE (I.E. EL. 379.00).
5. CONTRACTOR SHALL EVENLY GRADE THE BOTTOM OF THE CHANNEL FROM THE DOWN STREAM EDGE OF THE CONCRETE AT THE PROPOSED AERIAL CROSSING TO THE INDICATED ELEVATION NEAR THE RIVER. THE SHOWN LOCATION FOR EL. 391.5 IS APPROXIMATE AND SHALL BE FIELD VERIFIED BY THE CONTRACTOR.

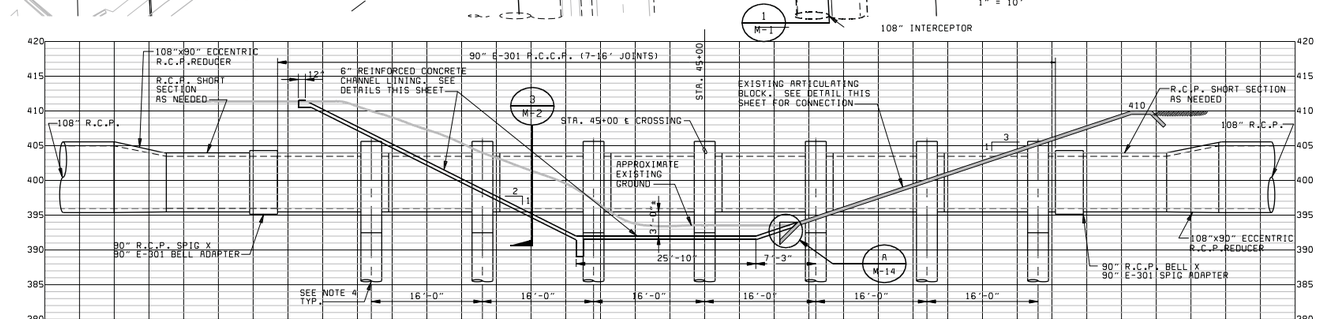

SECTION

1" = 10'-0"

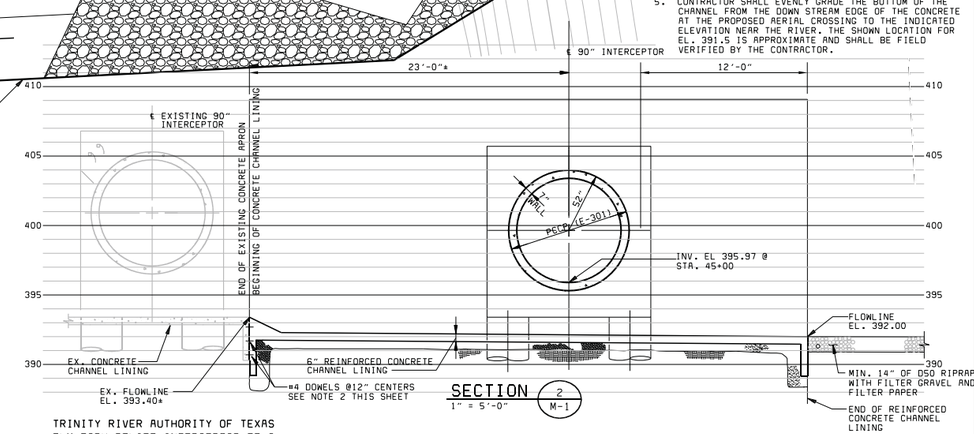

SECTION

1" = 5'-0"

TRINITY RIVER AUTHORITY OF TEXAS
ELM FORK RELIEF INTERCEPTOR EF-2

THIS DOCUMENT IS RELEASED UNDER THE AUTHORITY OF DAVID F. VALLEJO, P.E. # 89504, FOR THE PURPOSE OF INTERIM REVIEW. THIS PRELIMINARY DOCUMENT IS NOT TO BE USED FOR CONSTRUCTION, BIDDING, OR PERMITTING PURPOSES.

DATE:
FOR REVIEW ONLY

DATE	REVISIONS AND RECORD OF ISSUE	NO.	BY	CK	APP

DESIGNED DFV
DETAILED MRR,AQR
CHECKED
APPROVED
DATE

BLACK & VEATCH Building a world of difference.
Black & Veatch Corporation
Registration No. F-258
Dallas, Texas

BV PROJ NO 28525

Trinity River Authority of Texas
Elm Fork Relief Interceptor Segment EF-2

108" INTERCEPTOR AERIAL CROSSING
(DECURD P.S.#1 @ STA. 45+00)
PLANS, SECTIONS AND DETAILS

M-1

SHEET 31 OF 50

28525-3000-WWCG-C-N0000FJY9 05/19/2010 09:35:04, Plotted : 10/18/2011 2:39:43 PM

28525/Tra-C027.dwg
G28525
FG28525
Mstrsite.dwg

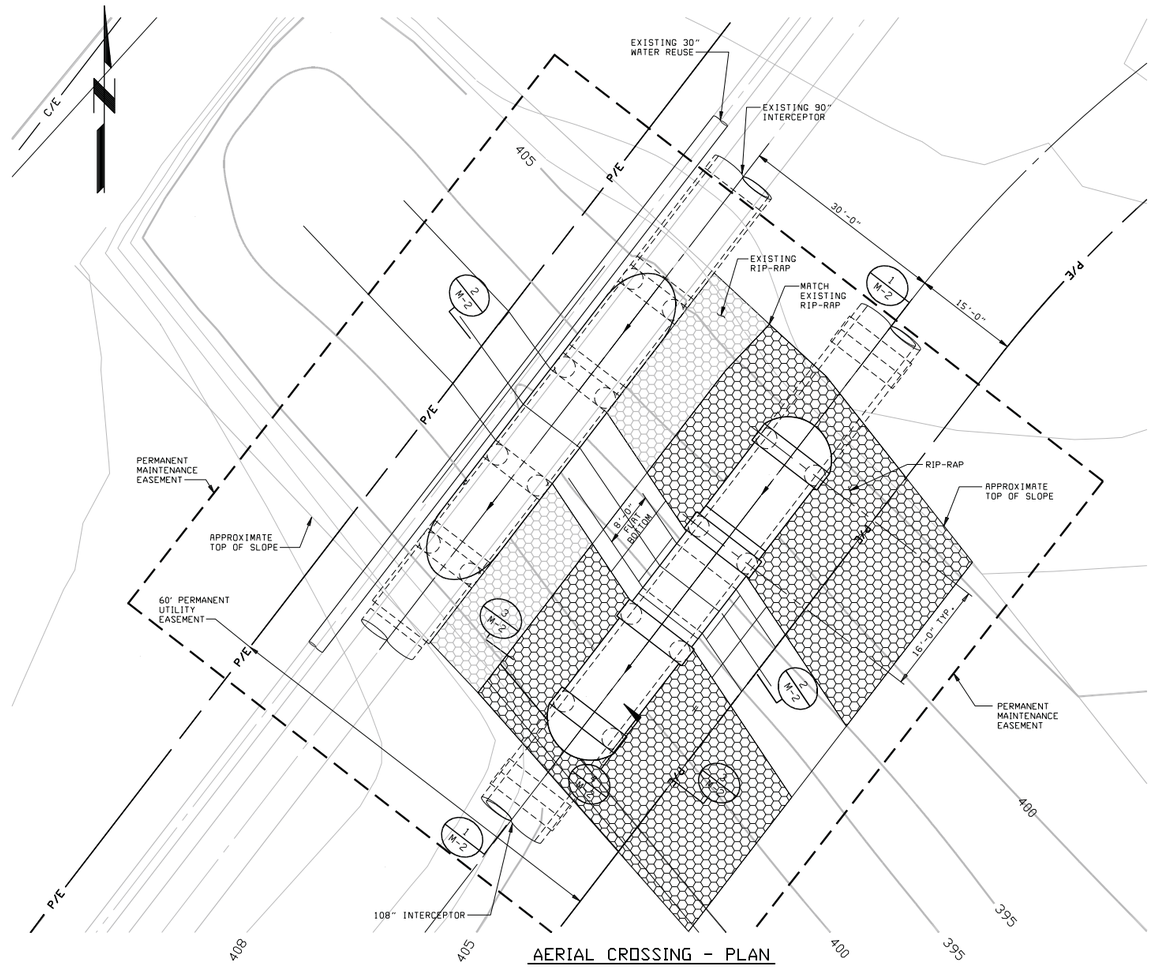

AERIAL CROSSING - PLAN
1" = 10'

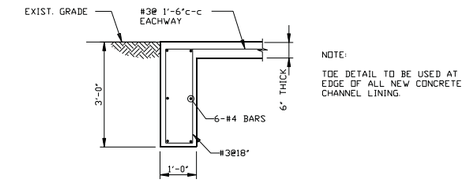

TOE DETAIL (A / M-2)
NO SCALE

NOTE:
TOE DETAIL TO BE USED AT EDGE OF ALL NEW CONCRETE CHANNEL LINING.

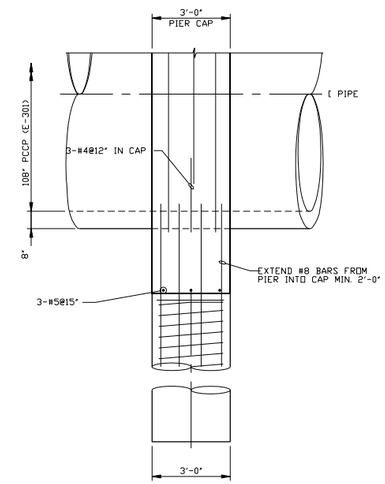

SECTION (4 / M-2)
3/8" = 1'-0"

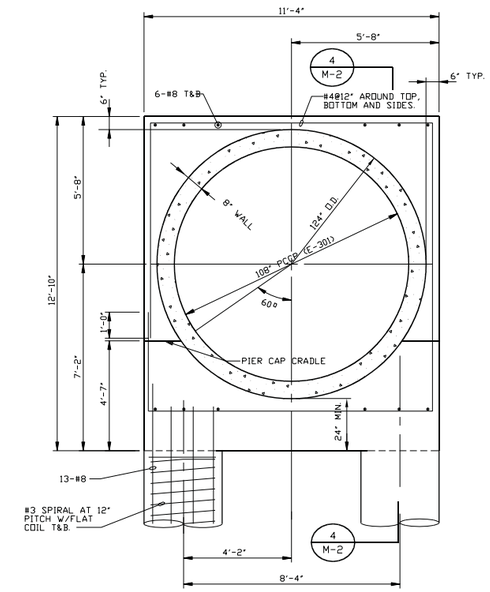

SECTION (3 / M-2)
3/8" = 1'-0"

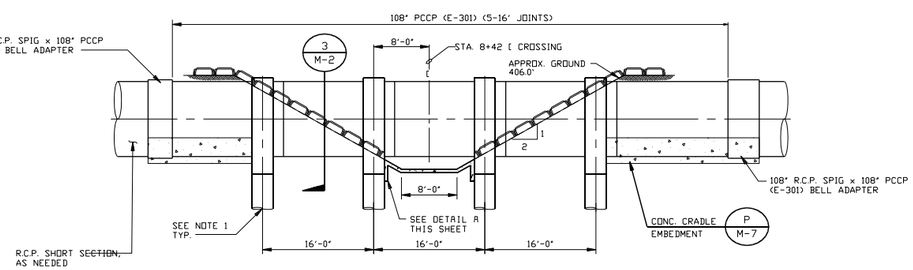

NOTES:

1. THE DRILLED PIERS SHALL BE EMBEDDED TO A MINIMUM DEPTH OF AT LEAST 3 FEET INTO UNDISTURBED GRAY SHALE (I.E. EL. 337.00).

SECTION (1 / M-2)
1" = 10'-0"

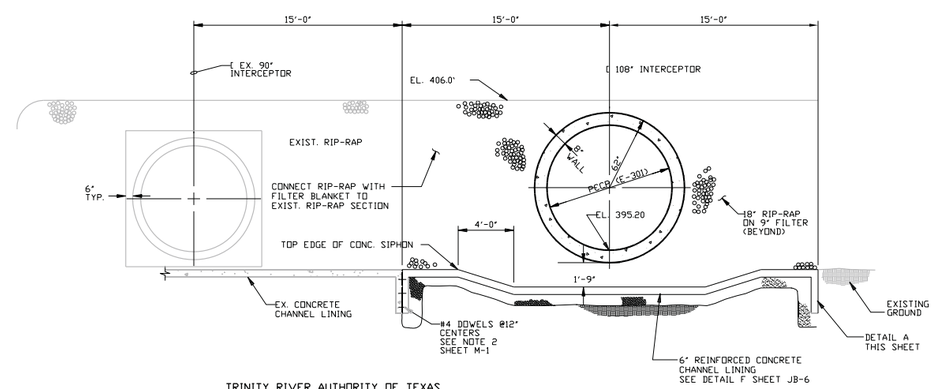

SECTION (2 / M-2)
1" = 5'-0"

TRINITY RIVER AUTHORITY OF TEXAS
ELM FORK RELIEF INTERCEPTOR EF-2

THIS DOCUMENT IS RELEASED UNDER THE AUTHORITY OF DAVID F. VALLEJO, P.E. # 89504, FOR THE PURPOSE OF INTERIM REVIEW. THIS PRELIMINARY DOCUMENT IS NOT TO BE USED FOR CONSTRUCTION, BIDDING, OR PERMITTING PURPOSES.

DATE:
FOR REVIEW ONLY

DATE	REVISIONS AND RECORD OF ISSUE	NO.	BY	CK	APP

DESIGNED CPD
DETAILED MRR,AQR
CHECKED
APPROVED
DATE

BLACK & VEATCH Building a world of difference.
Black & Veatch Corporation
Registration No. F-253
Dallas, Texas

BV PROJ NO 28525

Trinity River Authority of Texas
Elm Fork Relief Interceptor Segment EF-2

108" INTERCEPTOR AERIAL CROSSING
(SOUTH OF SH-183 @ STA. 8+42)
PLANS, SECTIONS & DETAILS

M-2

SHEET 32 OF 50

28525/M-02.dwg
C28525
FC28525

28525-3000-WWCG-C-N0000FJYB 05/19/2010 09:47:46, Plotted : 9/16/2011 3:19:20 PM

Mstrsite.dwg

AERIAL CROSSING - PLAN

1" = 10'

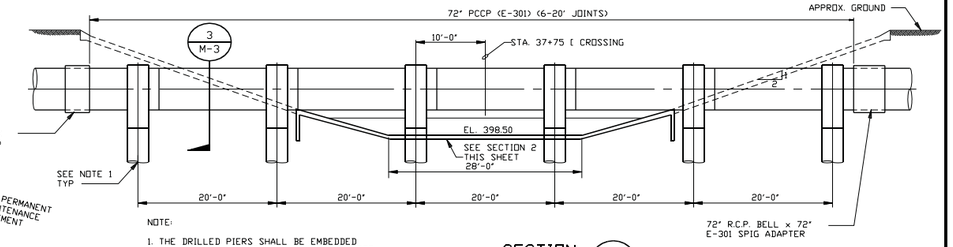

NOTE:

1. THE DRILLED PIERS SHALL BE EMBEDDED TO A MINIMUM DEPTH OF AT LEAST 3 FEET INTO UNDISTURBED GRAY SHALE (I.E. EL 335.00)

SECTION 1 / M-3

1" = 10'-0"

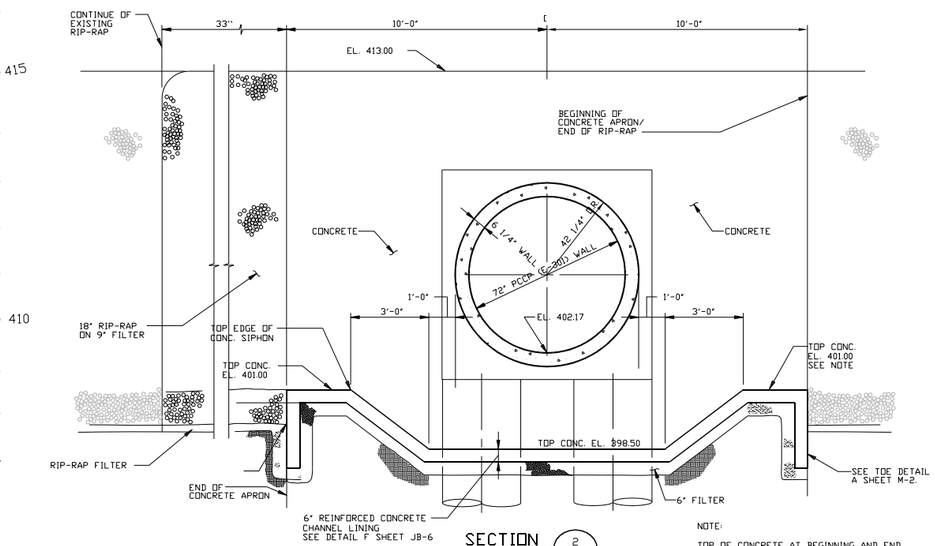

SECTION 2 / M-3

3/8" = 1'-0"

NOTE:

TOP OF CONCRETE AT BEGINNING AND END OF LINING TO MATCH EXISTING CHANNEL ELEVATION.

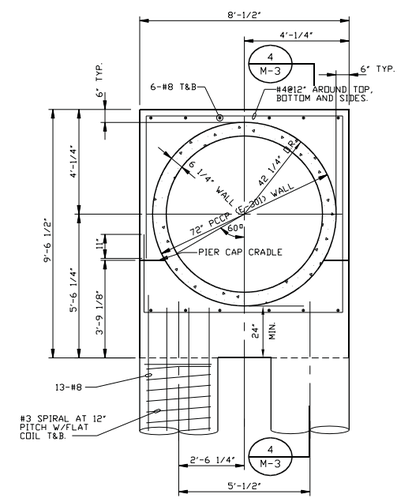

SECTION 3 / M-3

3/8" = 1'-0"

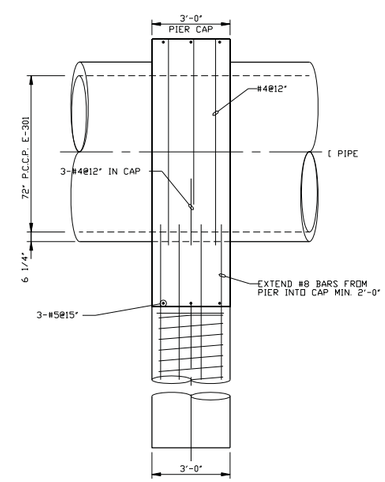

SECTION 4 / M-3

3/8" = 1'-0"

TRINITY RIVER AUTHORITY OF TEXAS
ELM FORK RELIEF INTERCEPTOR EF-2

THIS DOCUMENT IS RELEASED UNDER THE AUTHORITY OF DAVID F. VALLEJO, P.E. # 89504, FOR THE PURPOSE OF INTERIM REVIEW. THIS PRELIMINARY DOCUMENT IS NOT TO BE USED FOR CONSTRUCTION, BIDDING, OR PERMITTING PURPOSES.

DATE:
FOR REVIEW ONLY

DATE	REVISIONS AND RECORD OF ISSUE	NO.	BY	CK	APP

DESIGNED MWO
DETAILED MRR,AQR
CHECKED
APPROVED
DATE

BLACK & VEATCH Building a world of difference.
Black & Veatch Corporation
Registration No. F-258
Dallas, Texas

BV PROJ NO 28525

Trinity River Authority of Texas
Elm Fork Relief Interceptor Segment EF-2

72" LINE "E" AERIAL CROSSING
(LAKE CAROLYN) STATION 39+00
PLANS, SECTIONS AND DETAILS

M-3

SHEET 33 OF 50

28525-3000-WWCG-C-N0000FJYC 05/19/2010 09:52:01, Plotted : 9/16/2011 3:50:01 PM

Msrsite.dwg

Dwg:C:D-W-28525 FG28525

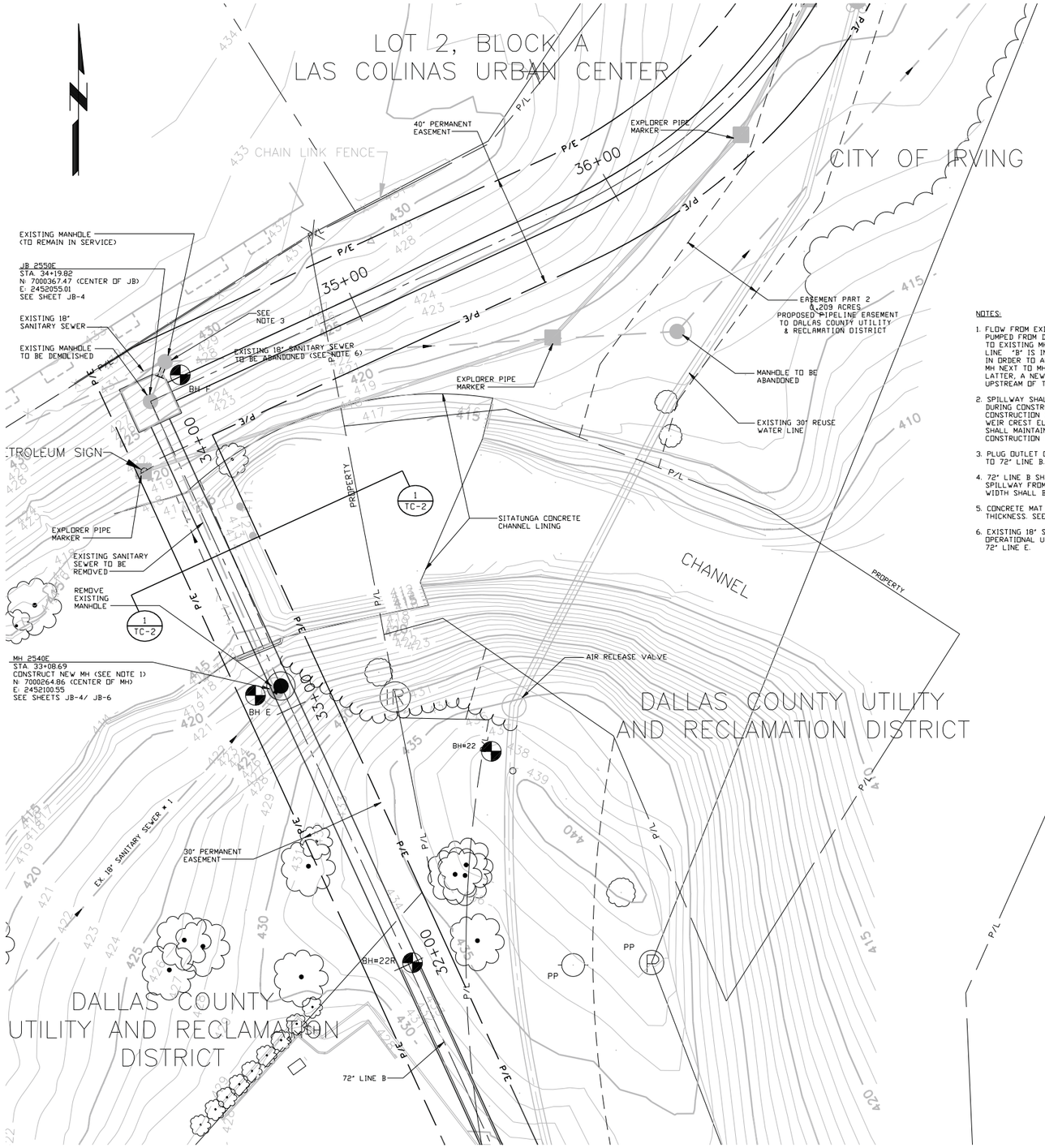

SPILLWAY CROSSING - PLAN
1" = 20'

NOTES:

1. FLOW FROM EXISTING 18" S.S. SHALL BE BYPASS PUMPED FROM DOWNSTREAM END OF THIS S.S. TO EXISTING MH NEAR JB 2550E WHILE 72" LINE "B" IS INSTALLED ACROSS SPILLWAY. IN ORDER TO ALLOW DEMOLITION OF THE EXISTING MH NEXT TO MH 2540E AND CONSTRUCTION OF THE LATTER, A NEW TEMPORARY MH SHALL BE INSTALLED UPSTREAM OF THE FORMER MH.
2. SPILLWAY SHALL REMAIN OPERATIONAL AT ALL TIMES DURING CONSTRUCTION. CONTRACTOR SHALL COORDINATE CONSTRUCTION WITH DCURD. CONTRACTOR SHALL VERIFY WEIR CREST ELEVATION PRIOR TO CONSTRUCTION AND SHALL MAINTAIN ELEVATION UPON COMPLETION OF CONSTRUCTION IN THE SPILLWAY AREA.
3. PLUG OUTLET ONCE ALL FLOWS HAVE BEEN DIVERTED TO 72" LINE B.
4. 72" LINE B SHALL BE EMBEDDED IN CLSM ACROSS SPILLWAY FROM STA. 33+07 TO STA. 34+19.82. TRENCH WIDTH SHALL BE AS INDICATED ON SECTION 02202.
5. CONCRETE MAT SHALL BE RESTORED TO ORIGINAL THICKNESS. SEE DETAIL A THIS SHEET.
6. EXISTING 18" SANITARY SEWER LINE SHALL REMAIN OPERATIONAL UNTIL ALL FLOWS ARE DIVERTED TO 72" LINE E.

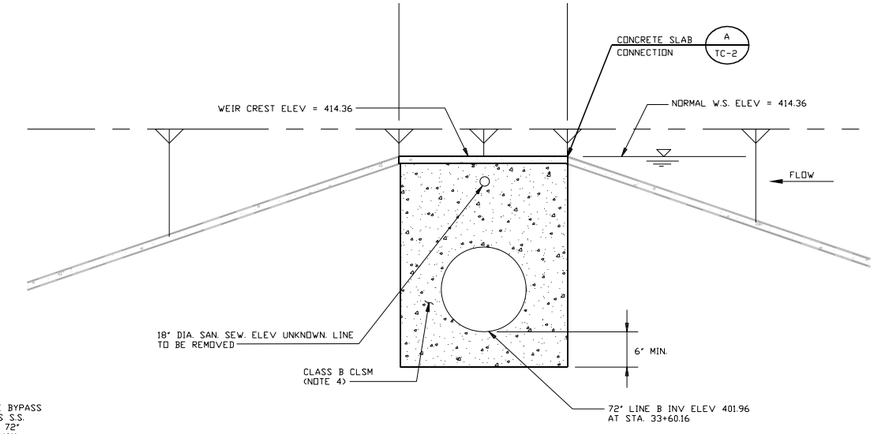

SPILLWAY - PROFILE
SCALE 1" = 10'-0"
1
TC-2

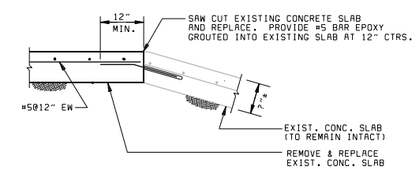

CONCRETE SLAB CONNECTION
NO SCALE
A

NOTE:
1. CONCRETE MAT SHALL BE RESTORED TO ORIGINAL THICKNESS. SEE DETAIL A THIS SHEET.

TRINITY RIVER AUTHORITY OF TEXAS
ELM FORK RELIEF INTERCEPTOR EF-2

THIS DOCUMENT IS RELEASED UNDER THE AUTHORITY OF DAVID F. VALLEJO, P.E. # 89504, FOR THE PURPOSE OF INTERIM REVIEW. THIS PRELIMINARY DOCUMENT IS NOT TO BE USED FOR CONSTRUCTION, BIDDING, OR PERMITTING PURPOSES.

DATE:
FOR REVIEW ONLY

DATE	REVISIONS AND RECORD OF ISSUE	NO.	BY	CK	APP

DESIGNED MWO
DETAILED AQR, MRR
CHECKED
APPROVED
DATE

BLACK & VEATCH Building a world of difference.
Black & Veatch Corporation
Registration No. F-258
Dallas, Texas

BV PROJ NO 28525

Trinity River Authority of Texas
Elm Fork Relief Interceptor Segment EF-2

72" LINE "B" SPILLWAY CROSSING
(LAKE SITATUNGA)
PLANS, SECTIONS AND DETAILS

TC-2

SHEET 22 OF 50

28525/TC-02.dwg
G28525
F28525
Mslrsite.dwg

28525-3000-WWCG-C-N0000FJTW 05/19/2010 09:44:31, Plotted : 9/16/2011 2:34:52 PM

BLACK & VEATCH

MEMORANDUM

Trinity River Authority of Texas
Elm Fork Relief Interceptor, Segment EF-2
Regulatory Division Permit No. 199800058
108-inch Interceptor Trench Embedment Provisions

B&V Project 28525.0310
B&V File F-1.40
November 5, 2010

To: Mark Sissom
U.S. Army Corps of Engineers (USACE)
Operations Division – Fort Worth District

From: Layne G. Parsons, P.E. and David Vallejo, P.E.

The purpose of this memorandum is to provide you with information in preparation for our meeting of November 10, 2010 on our proposed trench embedment provisions for addressing the USACE's concern with the 108-inch Interceptor excavation into the intermittent sand layer present at various depths along the 108-inch Interceptor alignment between Proctor Road and Loop 12.

The USACE Fort Worth District's Geotechnical Department has previously expressed concern with the 108-inch Interceptor excavation into the intermittent sand layer that extends under the levee. The interceptor trench embedment could potentially make it easier for flood water or groundwater to infiltrate into the previous sand layer. The previously presented updated design for the EF-2 project included restricting bidding of the EF-2 project so that construction of the segment in question would follow completion of the Irving Flood Control District (IFCD) Levee Slurry Wall Project. Since construction of the IFCD Slurry Wall Project has been delayed due to permitting issues with the USACE, we have developed a new approach that would allow the Trinity River Authority of Texas (the Authority) to bid and construct the EF-2 project without further delays.

Our proposed approach includes using controlled low-strength material (CLSM) in lieu of granular embedment to reduce the permeability of the embedment to a level lower than that of the existing soil. CLSM consists of a low-strength concrete (normally less than 200 psi) that has a mixture composed of cement, fly ash, sand, and additives. With this approach, installation of the 108-inch Interceptor not only will not impact the current permeability of the subsurface along the river side of the levee, but should actually improve it as the trench material would be replacing more permeable mixtures of clay, sandy clay, and sand with CLSM embedment and compacted clay backfill.

The current plan is to bid the EF-2 project with two pipe material alternatives: Lined reinforced concrete pipe (RCP), as the base bid, and Hobas® pipe, as the alternate bid. Because the pipeline is in the floodplain, both alternatives would require some level of ballast to counteract buoyancy. The RCP option would require a concrete ballast cap in shallow areas, while the Hobas® pipe option would require either complete concrete encasement in over 50 percent of the 108-inch Interceptor alignment or a concrete ballast cap in the remaining length. Attached are Drawings PP-1 through PP-4 of our 90-percent complete set, which show the pipeline alignment within the USACE's jurisdiction. Since these drawings only show the base bid option (RCP), we are providing below in **Tables 1 and 2** a summary of embedment conditions for both bid options for your reference. The proposed CLSM embedment would be used in areas where no concrete ballast is required to address flotation (applicable under RCP only) or in areas where only a concrete ballast cap is sufficient to control buoyancy (RCP and Hobas®). If Hobas® pipe is provided our proposed use of CLSM as pipe embedment material would only be applicable to the

segments that have a concrete ballast cap. The concrete ballast cap cover type includes CLSM embedment below the ballast cap.

Table 1 - Embedment Types for RCP Option

108" INTERCEPTOR - RCP ENCASEMENT SCHEDULE			
DS STATION	US STATION	SEGMENT LENGTH	COVER TYPE
00+00	02+50	250	CLSM Embedment
02+50	08+18	568	Concrete Ballast Cap
08+18	08+82	64	Aerial
08+82	36+00	2718	CLSM Embedment
36+00	39+00	300	Concrete Ballast Cap
44+44	45+56	112	Aerial Crossing
45+56	91+00	4544	CLSM Embedment
91+00	103+00	1200	Concrete Ballast Cap
103+00	120+00	1700	CLSM Embedment

Table 2 - Embedment Type for Hobas® Option

108" INTERCEPTOR - FRP ENCASEMENT SCHEDULE			
DS STATION	US STATION	SEGMENT LENGTH	COVER TYPE
00+00	02+00	200	Concrete Ballast Cap
02+00	08+02	602	Full Concrete Encasement
08+02	08+82	80	Aerial Crossing
08+82	23+00	1418	Full Concrete Encasement
23+00	29+00	600	Concrete Ballast Cap
29+00	44+00	1500	Full Concrete Encasement
44+00	44+44	44	Concrete Ballast Cap
44+44	45+56	112	Aerial Crossing
45+56	57+00	1144	Concrete Ballast Cap
57+00	59+00	200	Full Concrete Encasement
59+00	62+50	350	Concrete Ballast Cap
62+50	63+50	100	Full Concrete Encasement
63+50	75+00	1150	Concrete Ballast Cap
75+00	79+00	400	Full Concrete Encasement
79+00	87+50	850	Concrete Ballast Cap
87+50	104+00	1650	Full Concrete Encasement
104+00	110+00	600	Concrete Ballast Cap
110+00	112+50	250	Full Concrete Encasement
112+50	117+00	450	Concrete Ballast Cap
117+00	118+00	100	Full Concrete Encasement Except at Box Culvert
118+00	120+00	200	Concrete Ballast Cap

The proposed approach is shown in cross-section in the attached **Figures A, B, and C**. As indicated on these figures and explained in the previous paragraph, the pipeline would be embedded in concrete encasement, CLSM embedment/concrete ballast cap, or CLSM embedment alone, depending on the bid alternative and location. Above the pipe embedment, compacted-clay backfill would be installed and extend horizontally beyond the edges of the CLSM embedment or concrete encasement by 18 inches on each side to prevent water from channeling down along the vertical edges of the embedment or encasement. Since the pipe is in the flood plain and exposed to potential erosion of the top of the trench backfill, an erosion control layer will be used on top of the backfill. The erosion control layer includes a 6-inch gravel filter and 24 inches of rip-rap of D_{50} = 12 inches on top of the backfill. If the pipe cover depth on top of the pipe allows for it, a 6-inch soil layer would be recommended on top of the rip-rap to allow for growth of local vegetation that would make the design more aesthetically acceptable. If the clay backfill between the top of the pipe and the bottom of the previous erosion control layers is less than 12 inches in depth, a geomembrane would be placed under the erosion control layers to prevent water from channeling into the edges of the concrete encasement or CLSM embedment.

We look forward to discussing the above plan in more detail during our upcoming meeting on November 10, 2010. Please let us know if you need any additional information before this meeting.

TRINITY RIVER AUTHORITY OF TEXAS
CENTRAL REGIONAL WASTEWATER SYSTEM

PLANS
FOR CONSTRUCTION OF

ELM FORK RELIEF INTERCEPTOR
SEGMENT EF-2

DECEMBER 2008

TRINITY RIVER AUTHORITY OF TEXAS
Board of Directors

Michael Cronin — President
Linda D. Timmerman, Ed.D. — Vice-President

Harold L. Barnard
Herschel S. Brannen III
Karl R. Butler
Patricia Carlson
Steve Cronin
Amanda B. Davis
Ronald J. Goldman
John W. Jenkins
Katrina M. Keyes
Jess A. Laird
Nancy E. Lavinski
David B. Leonard
Andrew Martinez
Kevin Maxwell
Barbara Nash
James W. Neale
Manny Rachal
Amir Rupani
AnaLaura Saucedo
Shirley K. Seale
J. Carol Spillars
Kim C. Wyatt

LEVEL 3 REVIEW PACKAGE

TRINITY RIVER AUTHORITY OF TEXAS
ELM FORK RELIEF INTERCEPTOR EF-2

THIS DOCUMENT IS RELEASED UNDER THE AUTHORITY OF LAYNE G. PARSONS, P.E. # 66839, FOR THE PURPOSE OF INTERIM REVIEW. THIS PRELIMINARY DOCUMENT IS NOT TO BE USED FOR CONSTRUCTION, BIDDING, OR PERMITTING PURPOSES.
DATE:
FOR REVIEW ONLY

Management

Danny F. Vance, General Manager
Warren N. Brewer, Manager, Northern Region
Thomas D. Sanders, Construction Services Manager

Concur

Thomas D. Sanders, Construction Services Manager — Date

Approved

Warren N. Brewer, Northern Region Manager — Date

BLACK & VEATCH
Building a world of difference
Black & Veatch Corporation
Dallas, Texas

B&V P.N. 28525

Recommended For Approval

Layne G. Parsons, P.E.
Project Manager

David F. Vallejo, P.E.
Engineering Manager

PROJECT LOCATION – ELM FORK RELIEF INTERCEPTOR – SEGMENT EF-2

20000' 10000' 0 20000' 40000'
1"=20000'

SITE MAP LAYOUT

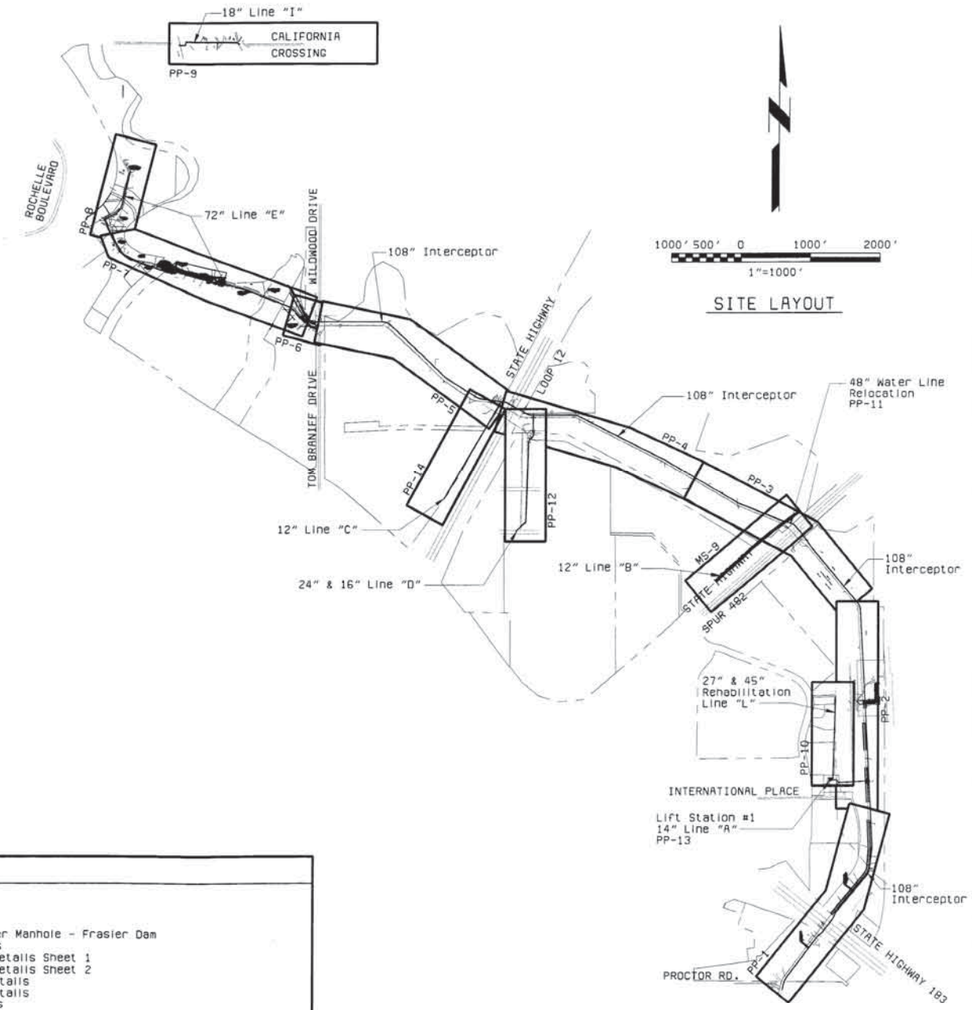

1000' 500' 0 1000' 2000'
1"=1000'

SITE LAYOUT

SHEET LIST

SHEET #		DESCRIPTION
0	Cover	
1	G1	Location Map, Site Layout & Sheet List
2	G2	Legend, Abbreviations and General Notes
		108" INTERCEPTOR - PLAN & PROFILE
3	PP-1	Plan & Profile Sta. 0+00 to Sta. 30+00
4	PP-2	Plan & Profile Sta. 30+00 to Sta. 60+00
5	PP-3	Plan & Profile Sta. 60+00 to Sta. 90+00
6	PP-4	Plan & Profile Sta. 90+00 to Sta. 120+00.
7	PP-5	Plan & Profile Sta. 120+00 to Sta. 150+00
8	PP-6	Plan & Profile Sta. 150+00 to Sta. 153+00
		72" LINE "E" - PLAN & PROFILE
9	PP-7	Plan & Profile Sta. 0+00 to Sta. 30+00
10	PP-8	Plan & Profile Sta. 30+00 to Sta. 40+26.84
		36" Line "G" & "H" Plan & Profile
		18" LINE "I" - PLAN & PROFILE
11	PP-9	Plan & Profile Sta. 0+00 to Sta. 8+26.13
		27" & 45" LINE "C" - PLAN & PROFILE
12	PP-10	Plan, Profile & Sections Sta. 0+00 to Sta. 12+28.45
		48" WATER LINE RELOCATION
13	PP-11	Plans, Sections Profile and Details
		24" & 16" LINE "D" - PLANT PROFILE
14	PP-12	Plan, Profile Sections & Details Sta. 0+00 to Sta. 17+11.45
		14" LINE "A" - PLAN & PROFILE
15	PP-13	Plan & Profile Sta. 0+00 to Sta. 6+36.81
		12" LINE "C" - PLAN AND PROFILE
16	PP-14	Plan & Profile Sta. 0+00 to Sta. 5+00
		LIFT STATION #1
17	LS-1	Site Layout & Site Layout Demolition
18	LS-2	Demolition Plans & Sections
19	LS-3	Lift Station Plans, Sections and Details
20	LS-4	Canopy & Monorail Plans, Sections and Details
		METERING STATIONS
21	MS-1	Demolition - Existing Metering Stations 4.0E & 8.0E Plans & Sections
22	MS-2	Metering Stations 7.5E & 10.0E Site Layout
23	MS-3	Fiberglass Metering Station 4.0E, 7.5E & 10.0E Plans, Sections & Details
24	MS-4	Fiberglass Metering Station 4.0E, 7.5E & 10.0E Plans, Sections & Details
25	MS-5	Metering Station 8.0E, 15 & 18-Inch Line "F" Site Layout & Details
26	MS-6	Metering Station 8.0E - Plans, Sections & Details
27	MS-7	Metering Station 8.0E - Instrumentation: Plans, Sections & Details
28	MS-8	Metering Station 4.0E - Site Layout & Line "K" Profile Metering Station 11.0E - Flow Diversion Line "L" Plan
29	MS-9	Metering Station 7.0E - Site Layout & Plan & Profile Sta. 0+00 to Sta. 7+98.53
30	MS-10	Enlarged View of Site Layout - Headwall Detail & Isolation Box Sections
31	MS-11	Isolation Valve Box Plans & Sections
		BANK STABILIZATION
32	B-1	Plan
33	B-2	Cross Sections
		TUNNEL CONSTRUCTION
34	TC-1	72" Tunnel - Sections & Details
35	TC-2	72" Line "E" Spillway Crossing (Lake Sitatunga) Plans, Sections & Details
36	TC-3	72" Line "E" - Channel Crossing Box Culvert (Cistercian Field) Plans, Sections & Details
		JUNCTION BOXES & MANHOLES
37	JB-1	Junction Box (JB2500E) - Plans, Sections & Details
38	JB-2	Junction Box (JB2340E & JB2342E) - Plans, Sections & Details, Miscellaneous Manhole Details
39	JB-3	Junction Box (JB2440E & JB2442E) - Plans, Sections & Details, Manhole Type I, II & IV Details
40	JB-4	Standard Manhole Details
41	JB-5	72" Line "E" - Sta. 34+19.82 JB2550 Site Location - Plans and Sections
42	JB-6	Standard Manhole Details
		MISCELLANEOUS DETAILS
43	M-1	108-Inch Interceptor Aerial Crossing (IFCO #1) Sta. 45+00 - Plans, Sections & Details
44	M-2	108-Inch Interceptor Aerial Crossing (South of SH-183) Plans, Sections & Details
45	M-3	72-Inch Line "E" Aerial Crossing (Lake Carolyn) Sta. 37+75, Plans, Sections & Details
46	M-4	108-Inch Interceptor Box Culvert, Loop 12 & Exxon Pipeline Sta. 31+07.5 & Sta. 117.73, Plans, Sections & Details
47	M-5	Erosion Control
48	M-6	Ultrasonic Transducer Manhole - Frasier Dam
49	M-7	Miscellaneous Details
50	M-8	Standard Concrete Details Sheet 1
51	M-9	Standard Concrete Details Sheet 2
52	M-10	Miscellaneous FRP Details
53	M-11	Miscellaneous FRP Details
54	M-12	Levee Cross Sections
		ELECTRICAL
55	E-1	Electrical Standard Legend, Abbreviations and General Requirements
56	E-2	Electrical - One-Line Diagram
57	E-3	Electrical Plans - Lift Station and MS 4.8E
58	E-4	Electrical Plans - Meter Stations MS 4.0E, 7.0E, 7.5E, 7.6E, 8.0E, and 10.0E
59	E-5	Electrical Miscellaneous Details
		P & ID
60	I-1	Legend and Abbreviations
61	I-2	Lift Station & Metering Stations
62	I-3	Instrumentation Installation Details Sheet 1 of 2
63	I-4	Instrumentation Installation Details Sheet 2 of 2

TRINITY RIVER AUTHORITY OF TEXAS
ELM FORK RELIEF INTERCEPTOR EF-2

THIS DOCUMENT IS RELEASED UNDER THE AUTHORITY OF LAYNE Z. PARSONS, P.E. # 66839, FOR THE PURPOSE OF INTERIM REVIEW. THIS PRELIMINARY DOCUMENT IS NOT TO BE USED FOR CONSTRUCTION, BIDDING, OR PERMITTING PURPOSES.

DATE:
FOR REVIEW ONLY

DATE	REVISIONS AND RECORD OF ISSUE	NO.	BY	CK	RPP

DESIGNED MRR
DETAILED AQR
CHECKED
APPROVED
DATE

BLACK & VEATCH Building a world of difference.
Black & Veatch Corporation
Dallas, Texas

BV PROJ NO 28525

Trinity River Authority of Texas
Elm Fork Relief Interceptor Segment EF-2

LOCATION MAP, SITE LAYOUT & SHEET LIST

G-1

SHEET 1 OF

28525-3000-KWCG-C-N0000FJH5 Date/Time, Plotted : 7/23/2008 10:26:45 AM

ABBREVIATIONS

A	ANGLE
AB	ANCHOR BOLT
AH	AHEAD
APPROX	APPROXIMATE(LY)
ARV	AIR RELEASE VALVE
AUTO	AUTOMATIC
BC	BURIED CABLE
BLDG	BUILDING
BLK	BLOCK
BM	BENCHMARK
BOF	BOTTOM OF FOOTING
BOT	BOTTOM
B & S	BELL & SPIGOT
C TO C	CENTER TO CENTER
CB	CATCH BASIN
CCFP	CENTRIFUGALLY CAST FIBERGLASS REINFORCED PIPE
C/EJ	CONTRACTION/EXPANSION JOINT
CE	CONSTRUCTION EASEMENT
C&G	CURB AND GUTTER
CHKD	CHECKERED
CI	CAST IRON
CIMH	CAST IRON MANHOLE
CIMHS	CAST IRON MANHOLE STEPS
CIP	CAST IRON PIPE
C.J	CONTROL JOINT
CL	CENTER LINE, CLASS, CHAIN LINK
CLR	CLEARTANCE
CMP	CORRUGATED METAL PIPE
CO	CLEAN OUT
CONC.	CONCRETE
CONST	CONSTRUCTION
CONT	CONTINUOUS, CONTINUATION, CONTROL
CTR(S)	CENTER(S)
CU	CUBIC
CU YD	CUBIC YARD
DBL	DOUBLE
DEG	DEGREE
DEPT	DEPARTMENT
DET	DETAIL
DI	DUCTILE IRON
DIA	DIAMETER
DIM	DIMENSION
DIP	DUCTILE IRON PIPE
D.M.	DEAD MAN
DWG(S)	DRAWING(S)
DWL(S)	DOWEL(S)
E	EAST
EA	EACH
ECC	ECCENTRIC
EF	EACH FACE
EJ	EXPANSION JOINT
ELEV.	ELEVATION
ENC	ENCASEMENT
ESMT.	EASEMENT
EW	EACH WAY
EWEF	EACH WAY EACH FACE
EWTB	EACH WAY TOP AND BOTTOM
EXIST/ EX	EXISTING
EXP JT	EXPANSION JOINT
F TO F	FACE TO FACE
FDN	FOUNDATION
F.H.	FIRE HYDRANT
FIG	FIGURE
FIN	FINISH
FL	FLOW LINE
FLG	FLANGE
FM	FORCE MAIN
FT	FOOT
FTG	FOOTING
FWD	FORWARD
G	GAS LINE
GA	GAUGE
GALV	GALVANIZED
GKT.	GASKET
GL	GROUND LINE
GM	GAS METER
GPM	GALLONS PER MINUTE
GR	GRADE
G.V.	GATE VALVE
HORIZ.	HORIZONTAL
HWY	HIGHWAY
ID	INSIDE DIAMETER
IF	INSIDE FACE
IN	INCHES
INCR	INCREASE
INV	INVERT
IPF	IRON PIN FOUND
I.P.	IRON PIN
JF	JOINT FILLER
JT	JOINT
L	LENGTH OF CURVE
LAT	LATERAL
LC	LENGTH OF CURB
LF	LINEAR FOOT
LG	LENGTH, LONG
LH	LEFT HAND
LIN	LINEAR, LINEAR
LP	LIGHT POLE
LT.	LEFT
MAX	MAXIMUM
MECH	MECHANICAL
M.H.	MANHOLE
MIN	MINIMUM
MISC	MISCELLANEOUS
M.J.	MECHANICAL JOINT
N	NORTH
N/A	NOT APPLICABLE
NBC	NAIL IN BOTTLE CAP
NO.(S)	NUMBER(S)
NOM	NOMINAL
NORM	NORMAL
NTS	NOT TO SCALE
OC	ON CENTER
OD	OUTSIDE DIAMETER
OF	OUTSIDE FACE, OVERFLOW
O.H.E.	OVERHEAD ELECTRICAL
O.H.P.	OVERHEAD POWER LINE
O.H.T.	OVERHEAD TELEPHONE LINE
P.C.	POINT OF CURVE
PCC	POINT OF COMPOUND CURVE
PCCP(E-301)	PRE-STRESSED CONCRETE CYLINDER PIPE
PCCP(C-303)	PRE-TENSIONED CONCRETE CYLINDER PIPE
PE	PERMANENT EASEMENT, PLAIN END.
PI	POINT OF INTERSECTION
PIVC	POINT OF INTERSECTION ON VERTICAL CURVE
PL	PLATE
P.P.	POWER POLE
PRC	POINT OF REVERSE CURVE
PS	PIPE SUPPORT
PSF	POUNDS PER SQUARE FOOT
PSI	POUNDS PER SQUARE INCH
P.T.	POINT, POINT OF TANGENCY
PUE	PERMANENT UTILITY EASEMENT
PVC	POLYVINYL CHLORIDE PLASTIC
PVSP	POLYVINYL CHLORIDE SEWER PIPE
PVCPP	POLYVINYL CHLORIDE (PVC) PRESSURE PIPE
PVMT	PAVEMENT
R	RADIUS
RC	PRE-CAST REINFORCED CONCRETE
RCBC	PRE-CAST REINFORCED CONCRETE BOX CULVERT
RCP	REINFORCED CONCRETE SEWER PIPE
RED	REDUCER, REDUCING
REINF	REINFORCING
REQD	REQUIRED
RR	RAILROAD
RT.	RIGHT
R.O.W.	RIGHT OF WAY
SCHED	SCHEDULE
S.D.	STORM DRAIN
SECT	SECTION
SH	SHEET
SIM	SIMILAR
SPEC(S)	SPECIFICATION(S)
SQ	SQUARE
SY	SQUARE YARD
S.S.	SANITARY SEWER
STM SWR	STORM SEWER
STA.	STATION
STD	STANDARD
T	TANGENT
TBM	TEMPORARY BENCHMARK
TCE	TEMPORARY CONSTRUCTION EASEMENT
TEMP	TEMPERATURE, TEMPORARY
TRANS	TRANSFORMER
TV	TELEVISION
TYP	TYPICAL
U.E.	UNDERGROUND ELECTRICAL CABLE
UCP	UNDERGROUND POWER LINE
U.T.	UNDERGROUND TELEPHONE CABLE
USGS	UNITED STATE GEOLOGICAL SURVEY
VC	VERTICAL CURVE
VCP	VITRIFIED CLAY (STANDARD STRENGTH)
VCS	VITRIFIED CLAY (EXTRA STRENGTH)
VERT.	VERTICAL
W	WATER LINE, WEST
W/	WITH
WM	WATER METER, MARKER
W/O	WITHOUT
WS	WATERSTOP
WT	WEIGHT
WWF	WELDED WIRE FABRIC
&	AND
@	AT

LEGEND

PLANS

EXISTING

- HEDGES, BRUSH, SHRUBS, WOODS, TREE LINE
- TREE (BLACKBERRY)
- SURFACED STREET, ROAD OR DRIVES WITH CURB
- NON-SURFACED STREET, ROADS OR DRIVE
- CONCRETE WALK
- BUILDINGS, STRUCTURES
- SIGN
- FIRE HYDRANT
- GAS METER
- WATER METER
- GAS SERVICE
- CLEAN OUT
- WIRE GUY
- DOUBLE GUY
- ELETRICAL UTILITY
- OVERHEAD UTILITY
- POWER POLE
- TRANS. TOWER
- POWER POLE W/ GUY
- POWER POLE W/ LIGHT
- POWER POLE W/ TRANSFORMER
- LIGHT POLE
- SERVICE POLE
- TELEPHONE PEDESTAL

EXISTING

- WOOD FENCE
- WIRE FENCE
- STOCKADE FENCE
- CHAIN LINK FENCE
- RIF
- CLOTH LINE
- BOLLARDS
- METAL BOLLARDS
- FLOW ARROW
- DETAIL LETTER OR SECTION NUMBER
- DRAWING NUMBER ON WHICH SECTION OR DETAIL APPEARS, OR WHERE SECTION IS CUT OR DETAIL IS NOTED.

PLANS

EXISTING		NEW
EXIST. 4" G	GAS LINE AND SIZE	
EXIST 6" SD	STORM DRAIN	
HV	WATER VALVE	
EXIST. 6" W	WATER LINE AND SIZE	
6"SS 6"SS SSMH	SANITARY SEWER AND MANHOLE	NEW 8" S.S.
	CENTERLINE	
	TEMPORARY BENCHMARK / BENCHMARK	TBM =1 BM =1
	TUNNELING	
	DEMOLITION (OR TO BE OUT OF SERVICE)	
	GABIONS	
	RIP-RAP	

PLANS

EXISTING		NEW
P/L	PROPERTY LINE	
P.U.E. PARCEL #	PERMANENT EASEMENT LINE	P/E
	TEMPORARY CONSTRUCTION EASEMENT LINE	C/E
	RAILROAD TRACKS	
	REMOVE EXISTING SEWER	
	ABANDON EXISTING SEWER	
	PAVEMENT REPAIR (ASPHALT)	
	PAVEMENT REPAIR (CONCRETE)	
	ARIAL CROSSING	
	BOX CULVERT	
	FUTURE P.O.E.	

PROFILE

EXISTING		NEW
	MANHOLE (SEWER)	
	BACKFILL MATERIAL	
	LINER PLATE TUNNELING	
	SEWER LINE SIZE AND GRADE	
	UTILITIES	
	BALLAST CAP & FILL	
	AERIAL CROSSING	

GENERAL NOTES:

1. SURVEYING: BEARINGS AND COORDINATES ARE BASED ON TEXAS STATE PLANE COORDINATE SYSTEM, AND 83, NORTH CENTRAL ZONE AND CITY OF IRVING GPS CONTROL MONUMENTS A10 AND A11. THE COMBINED SCALE FACTOR IS 0.999856145.
2. THE INFORMATION SHOWN ON THESE DRAWINGS CONCERNING TYPE AND LOCATION OF UNDERGROUND AND OTHER UTILITIES IS NOT GUARANTEED TO BE ACCURATE OR ALL INCLUSIVE. THE CONTRACTOR IS RESPONSIBLE FOR MAKING HIS OWN DETERMINATION AS TO THE TYPE AND LOCATION OF UNDERGROUND AND OTHER UTILITIES AS MAY BE NECESSARY TO AVOID DAMAGE THERETO.
3. CONTRACTOR IS RESPONSIBLE FOR REPAIR OF ANY DAMAGE INCURRED TO ANODE GROUNDING BED DURING CONSTRUCTION. LOCATE PRIOR TO CONSTRUCTION.
4. ELEVATIONS ARE NGVD (NATIONAL GEOGRAPHIC VERTICAL DATUM)
5. R.C.P. DESIGNATES REINFORCED CONCRETE PIPE WHICH SHALL MEET REQUIREMENTS OF ASTM C-655 AS SPECIFIED IN SECTION 02618 OF THE SPECIFICATIONS.
6. ALL MANHOLE COVERS SHALL BE BROUGHT TO 1/2 FOOT ABOVE FINISH GRADE UNLESS OTHERWISE INDICATED ON THE PLANS.
7. SEE SHEET JB-3 AND JB-4 FOR MANHOLE DETAILS.
8. PIPELINE MARKERS SHALL BE LOCATED AS SHOWN. SEE DETAIL M SHEET M-7 FOR MARKER DETAILS.
9. SURVEYS USED IN THE PREPARATION OF THESE DRAWINGS WERE MADE IN 1998/1999. CONTRACTOR IS ADVISED TO THOROUGHLY EXAMINE PROJECT SITE TO VERIFY CURRENT TOPOGRAPHICAL INFORMATION.
10. SEE SPECIFICATION FOR REQUIREMENTS OF CONSTRUCTION WITHIN THE FLOODWAY AND FLOOD PLAIN R.O.W.
11. 108" SEGMENT EF-2 NOT TO BE PLACED IN SERVICE UNTIL DOWNSTREAM PROJECT (102" EF-1) IS PLACED IN SERVICE.
12. 72" SEGMENT EF-2 TO BE PLACED IN SERVICE BEFORE EXISTING 45" IS TAKEN OUT OF SERVICE.
13. 108" SEGMENT EF-2 AND EXISTING 90" TO BE IN SERVICE WITHIN 7 DAYS OF ACTIVATION OF 72" SEGMENT EF-2.
14. ALL EXISTING SEWER LINES SHALL REMAIN IN SERVICE AT ALL TIMES. EXISTING LINES TO BE ABANDONED SHALL REMAIN IN SERVICE UNTIL ALL FLOWS HAVE BEEN DIVERTED.
15. SERVICE BEING PROVIDED BY KNOWN EXISTING SEWER LINES TO REMAIN IN SERVICE AT ALL TIMES.
16. DETAILS FOR PIPELINE EMBEDMENT IS LOCATED IN THE EARTHWORK SECTION OF THE SPECIFICATIONS.
17. TREES LOCATED OUTSIDE THE LIMITS OF THE CONSTRUCTION EASEMENT SHALL BE PROTECTED FROM CONSTRUCTION ACTIVITIES AT ALL TIMES. CONTRACTOR TO REMOVE ONLY THE TREES NECESSARY FOR PROPER EXECUTION OF THE WORK.
18. NO BORROW TO BE TAKEN FROM FLOOD WAY ON FLOOD PLAIN. EXCESS EXCAVATED MATERIAL TO BE REMOVED FROM THE FLOOD PLAIN OR FLOODWAY WITHIN TWO WEEKS OF EXCAVATION.
19. IRRIGATION PIPING/ SYSTEM SHALL REMAIN IN OPERATION. IF IRRIGATION IS DAMAGED IT SHALL BE RESTORED WITHIN 72 HOURS, BY THE CONTRACTOR.
20. ANY AND ALL BERM, BUILDINGS, PAVING, SHOOTING TUBES, ETC. DISTURBED, DAMAGED, OR DESTROYED DURING CONSTRUCTION SHALL BE RESTORED TO ORIGINAL OR BETTER CONDITION.
21. DESIGNS IN THESE DOCUMENTS ARE BASED ON REINFORCED CONCRETE PIPE (RCP). CENTRIFUGALLY CAST FIBERGLASS REINFORCED POLYMER MORTAR PIPE BY HOBAS PIPE USA IS AN ACCEPTABLE ALTERNATIVE PROVIDED THAT DESIGN MODIFICATIONS INCLUDE THE FOLLOWING AT NO ADDITIONAL COST TO THE OWNER:
    A. PIPE IS DESIGNED BY A LICENSED PROFESSIONAL ENGINEER, REGISTERED IN THE STATE OF TEXAS
    B. INSIDE PIPE DIAMETERS ARE AS SHOWN ON DRAWINGS.
    C. ALL CONNECTIONS ARE ADJUSTED TO PROVIDE WATER TIGHT SEALS AND TO MAINTAIN THE STRUCTURAL INTEGRITY OF THE SYSTEM EQUAL TO OR BETTER THAN SHOWN ON DRAWINGS.
    D. PIPE EMBEDMENT MATERIALS, DIMENSIONS AND VOLUMES ARE ADJUSTED AND PROVIDED IN ACCORDANCE WITH THE PIPE MANUFACTURER AND THE DESIGNER.
    E. PIPE DESIGN AND REQUIRED MODIFICATIONS SHALL INCLUDE ALL LOADINGS ASSOCIATED WITH THE FOLLOWING:
        I. DEAD WEIGHT OF WET SOILS (MINIMUM OF 120 PCF)
        II. LIVE LOADS, H20, INCLUDING AN IMPACT FACTOR OF AT LEAST 1.5
        III. FACTOR OF SAFETY OF AT LEAST 1.1
        IV. STANDARD PROJECT FLOOD ELEVATION OF 432.00
        V. UPLIFT FOR THE SAME ASSUMING EMPTY WATER TIGHT PIPE
        VI. STIFFNESS CLASSES FOR HOBAS PIPE SHALL APPROXIMATELY MATCH THE STATION RANGES FOR D-LOADS SHOWN ON SPECIFICATIONS AND SHALL BE DESIGNED FOR THE WORST CASE LOADING CONDITIONS WITHIN THOSE RANGES.
22. AT POINTS WHERE NEW PIPE CROSSING BENEATH EXISTING UTILITIES, SOIL SHALL BE COMPACTED TO 95% STANDARD PROCTOR BETWEEN THE NEW PIPE AND BENEATH THE EXISTING UTILITY, FOR A SPAN CENTERED ALONG THE CROSSING AND EXTENDING AT LEAST 5 FEET TO EACH SIDE OF CROSSING. FLOWABLE FILL OR CEMENT STABILIZED SAND SHALL BE COMPACTED IMMEDIATELY AROUND AND EXTENDING AT LEAST 1 FOOT AROUND EXISTING UTILITY BEING CROSSED.
23. ALL CONCRETE STRUCTURES AND MANHOLES SHALL BE LINED WITH CORROSION-RESISTANT LINING. SEE SECTIONS 03730 AND 09840.
24. ALL CONCRETE PIPES SHALL BE LINED WITH PLASTIC SHEET LINING.
25. US ARMY CORPS OF ENGINEERS OPERATIONS DIVISION - FORT WORTH DISTRICT RESERVES THE RIGHT TO BE ONSITE AT ANY TIME DURING CONSTRUCTION AND IT SHALL BE THE CONTRACTOR'S RESPONSIBILITY TO NOTIFY THE FORT WORTH DISTRICT A MINIMUM OF 5 DAYS PRIOR TO START OF CONSTRUCTION, INCLUDING START OF CONSTRUCTION ACTIVITIES RELATED TO ANY OF THE LEVEE CROSSINGS.

GENERAL NOTES CONT.

26. THE FLOOD CONTROL LEVEES, ROAD ALONG THE TOP OF THE LEVEES, AND ALL ACCESS RAMPS AND ROADS SHALL BE KEPT FREE OF EQUIPMENT AND MATERIALS AT ALL TIMES. STORAGE OF MATERIALS AND EQUIPMENT AND DISPOSAL STOCKPILES SHALL BE PROVIDED IN AREAS OTHER THAN THE LEVEE OR LEVEE ACCESS ROADS.
27. HAUL AND ACCESS ROUTES TO THE CONSTRUCTION CORRIDOR SHALL BE THROUGH THE LOCATIONS INDICATED IN SECTION 01569 OF THE SPECIFICATIONS. NOT OTHER ACCESS POINTS WILL BE AVAILABLE.
28. CONTRACTOR SHALL MAINTAIN 5 FT. FROM ALL COLUMNS OF THE EXISTING BRIDGE STRUCTURE AT HIGHWAY CROSSINGS. IF FIELD DISTANCE BETWEEN BRIDGE COLUMNS AND 108" INTERCEPTOR SEWER IS LESS THAN 5 FT. CONTRACTOR SHALL REALIGN PIPELINE AS NECCESARY.
29. CONTRACTOR TO NOTIFY TX-DOT PERSONNEL GERRY HENNING (214-320-6418) FOR THE HIGHWAY CROSSING AT LOOP 12 AND RLI TAHERI (972-479-9747) FOR THE HIGHWAY CROSSINGS AT SPUR 482 AND SH 183 48 HOURS PRIOR TO STARTING CONSTRUCTION OF THE HIGHWAY CROSSINGS.
30. BACKFILL PLACED AROUND THE OUTSIDE OF STRUCTURES SHALL BE STRUCTURAL BACKFILL AS DEFINED IN SECTION 02200. A 4 FT. THICK COVER OF WELL COMPACTED IMPERVIOUS CLAY SHALL BE PLACED OVER THE TOP OF THE STRUCTURAL BACKFILL AS SHOWN ON DETAIL A ON SHEET M-7.
31. IN ADVANCE OF EXCAVATING, CONTRACTOR SHALL FIELD VERIFY THE PRECISE LOCATION AND ELEVATION OF ALL UTILITIES AND STRUCTURES, WHETHER INDICATED ON THE DRAWINGS OR NOT, BY CONTACTING ALL UTILITIES AND AGENCIES, AND BY PROSPECTING. IF CONFLICTS ARE DETERMINED TO EXIST AFTER FIELD VERIFICATION, CONTRACTOR SHALL COORDINATE WITH THE ENGINEER TO DETERMINE ANY NECESSARY MODIFICATIONS TO PROPOSED FACILITIES.
32. CONTRACTOR SHALL FIELD VERIFY THE PRECISE LOCATION, ELEVATION, AND ARRANGEMENT OF CONNECTIONS OF NEW PIPELINES WITH EXISTING PIPELINES. CONTRACTOR SHALL PROVIDE FITTINGS AND ADAPTERS AND MODIFY EXISTING PIPING AS REQUIRED TO MAKE THE CONNECTIONS. CONTRACTOR SHALL PROVIDE TEMPORARY PLUGS AS REQUIRED FOR TESTING BEFORE MAKING CONNECTIONS, WHEN APPLICABLE.
33. CONTRACTOR IS RESPONSIBLE FOR ALL TRENCH SAFETY, AS SPECIFIED IN THE CONTRACT DOCUMENTS. THE CONTRACTOR SHALL CONSTRUCT ALL WORK IN ACCORDANCE WITH A TRENCH SAFETY PLAN PREPARED FOR THIS PROJECT BY A REGISTERED PROFESSIONAL ENGINEER.
34. ABANDONMENT PROCEDURE FOR EXISTING PIPELINE SHALL BE AS INDICATED BELOW.

OWNER	DRAWING	LOCATION	DIAMETER, IN.	LENGTH, FT.	ABANDON PROCEDURE
TRA	PP-2 - PP-6	PARALLEL TO 108" ON DRY SIDE OF LEVEE	45	10700	500' TO BE FILLED WITH CLSM (LEVEE), 10-200' NOT TO BE FILLED
TRA	PP-13	FROM MH 260E TO EXISTING LS	45	50	TO BE FILLED WITH CLSM
IRVING	PP-3 / MS-9	MS 7.0E	12	100	TO BE FILLED WITH CLSM
IRVING	PP-8	NEAR SITATUNGA CHANNEL	18	450	TO BE FILLED WITH SAND
IRVING	PP-8	NEAR LAKE CAROLINA CHANNEL	36	200	TO BE FILLED WITH SAND
DALLAS	PP-9	CALIFORNIA CROSSING	12	800	TO BE FILLED WITH SAND
IRVING/ G.P.	PP-11	WATER MAIN RELOCATION	48	180	TO BE FILLED WITH CLSM
IRVING	PP-12	MS 7.5E	12	1600	TO BE FILLED WITH CLSM

UTILITY & OWNER CONTACT INFORMATION

Texas Excavation Safety Systems (TESS) ---------- 800-DIG-TESS
Texas One Call System (TOCS) ---------- 800-245-4545
IRVING FLOOD CONTROL DISTRICT (MR. PAUL PHY)----------214-522-5096
CITY OF IRVING (MR. GARRY FENNEL)----------972-721-3721

TRINITY RIVER AUTHORITY OF TEXAS
ELM FORK RELIEF INTERCEPTOR EF-2

THIS DOCUMENT IS RELEASED UNDER THE AUTHORITY OF LAYNE G. PARSONS, P.E. # 66839, FOR THE PURPOSE OF INTERIM REVIEW. THIS PRELIMINARY DOCUMENT IS NOT TO BE USED FOR CONSTRUCTION, BIDDING, OR PERMITTING PURPOSES.

DATE:
FOR REVIEW ONLY

DATE	REVISIONS AND RECORD OF ISSUE	NO.	BY	CK	APP

DESIGNED MRR,AQR
DETAILED MRR,AQR
CHECKED
APPROVED
DATE

BLACK & VEATCH Building a world of difference.
Black & Veatch Corporation
Dallas, Texas

BV PROJ NO 28525

Trinity River Authority of Texas
Elm Fork Relief Interceptor Segment EF-2

LEGEND, ABBREVIATIONS, AND GENERAL NOTES

G-2

SHEET 2 OF XX

28525-3000-WWCG-C-N0000FJH6 10/26/2004 08:44:25, Plotted : 6/24/2008 2:16:40 PM

CURVE #1
Δ= 23°20'55.17" RT.
R= 200'
LC= 81.502'
P.C. = STA. 1+07.35
N: 10563.23
E: 26733.90
P.T. = STA. 1+88.85
N: 10636.04
E: 26769.25

CURVE #2
Δ= 16°6'27.07" RT.
R= 200'
LC= 56.226'
P.C. = STA. 8+93.79
N: 11194.79
E: 27199.06
P.T. = STA. 9+50.01
N: 11233.98
E: 27239.12

CURVE #3
Δ= 15°45'38.57 LT.
R= 200'
LC= 55.02'
P.C. = STA. 9+67.21
N: 11244.17
E: 27252.97
P.T. = STA. 10+22.22
N: 11282.41
E: 27292.28

CURVE #4
Δ= 12°57'25.62" LT.
R= 200'
LC= 45.23'
P.C. = STA. 12+31.83
N: 11447.77
E: 27421.09
P.T. = STA. 12+77.06
N: 11486.28
E: 27444.63

GENERAL NOTES:

1. CONTRACTOR SHALL DESIGN AND INSTALL SHORING FACILITIES SUFFICIENT TO PREVENT DAMAGE TO EXISTING BRIDGE STRUCTURE. SEE HIGHWAY CROSSING PERMIT IN THE SPECIFICATIONS.
2. EXISTING 3-INCH EXPLORER PIPELINE COMPANY GAS PIPELINE INACTIVE. CONTRACTOR SHALL REMOVE EXISTING GAS PIPELINE 15-FEET EITHER SIDE OF THE PROPOSED ALIGNMENT. CONTRACTOR SHALL PLUG THE EXISTING LINE WITH A MINIMUM OF 2 FEET OF CONCRETE. CONTRACTOR SHALL CONTACT MR. GARY FRY WITH EXPLORER PIPELINE COMPANY AT (918) 591-3162 A MINIMUM OF 48 HOURS PRIOR TO CONSTRUCTION IN VICINITY OF THE EXPLORER PIPELINE COMPANY PIPELINE.
3. VERIFY LOCATION, SIZE, CONFIGURATION AND ALIGNMENT OF EXISTING PIPE AT STATION 0+00 PRIOR TO ORDERING OR PURCHASING PIPE AND MATERIALS.

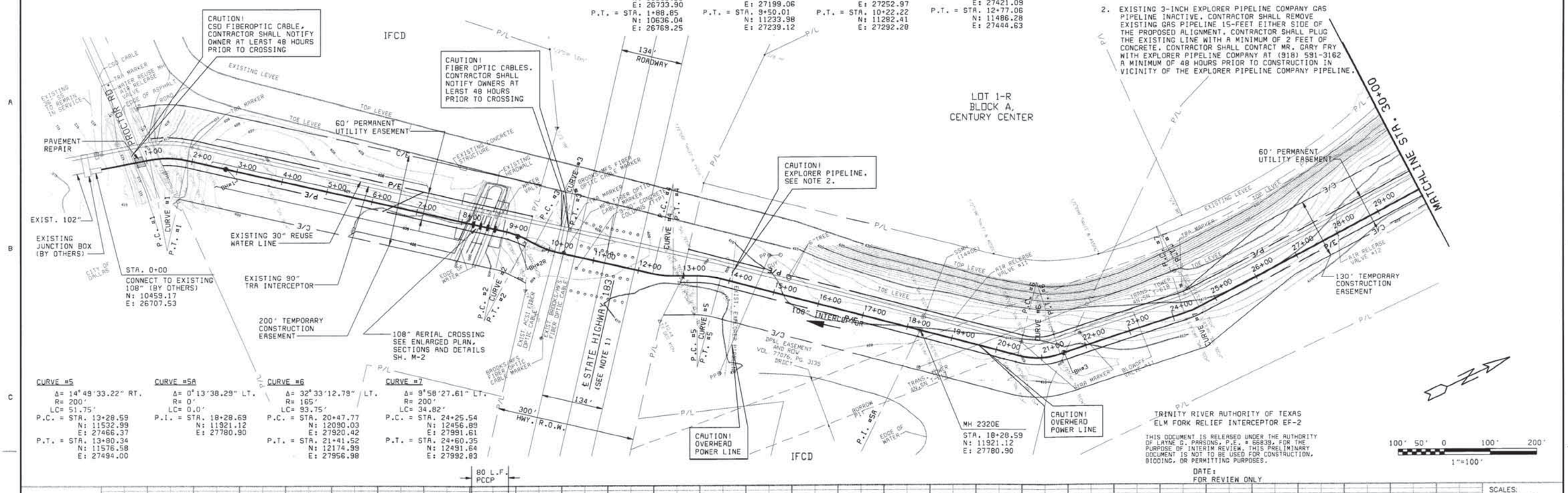

CURVE #5
Δ= 14°49'33.22" RT.
R= 200'
LC= 51.75'
P.C. = STA. 13+28.59
N: 11532.99
E: 27466.37
P.T. = STA. 13+80.34
N: 11576.58
E: 27494.00

CURVE #5A
Δ= 0°13'38.29" LT.
R= 0'
LC= 0.0'
P.I. = STA. 18+28.69
N: 11921.12
E: 27780.90

CURVE #6
Δ= 32°33'12.79" LT.
R= 165'
LC= 93.75'
P.C. = STA. 20+47.77
N: 12090.03
E: 27920.42
P.T. = STA. 21+41.52
N: 12174.99
E: 27956.98

CURVE #7
Δ= 9°58'27.61" LT.
R= 200'
LC= 34.82'
P.C. = STA. 24+25.54
N: 12456.89
E: 27991.61
P.T. = STA. 24+60.35
N: 12491.64
E: 27992.83

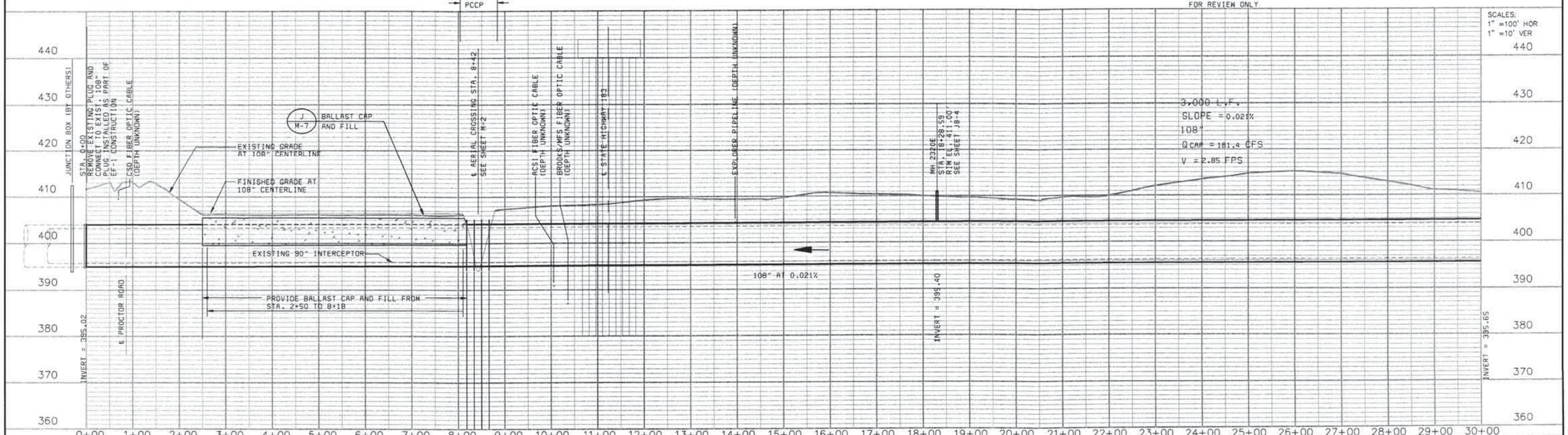

DATE	REVISIONS AND RECORD OF ISSUE	NO.	BY	CK	APP

DESIGNED CPD
DETAILED MRR,AQR
CHECKED
APPROVED
DATE

BLACK & VEATCH
Building a world of difference.
Black & Veatch Corporation
Dallas, Texas

BV PROJ NO 28525

Trinity River Authority of Texas
Elm Fork Relief Interceptor Segment EF-2

108" INTERCEPTOR
PLAN AND PROFILE
STA. 0+00 TO STA. 30+00

PP-1
SHEET 3 OF XX

28525-3000-WWCG-C-N0000FJH7 Date/Time, Plotted : 6/26/2008 9:09:25 AM

GENERAL NOTES:

1. CONTRACTOR TO COORDINATE CONSTRUCTION OF AERIAL CROSSING AT STA. 45+00 WITH THE IRVING FLOOD CONTROL DISTRICT. SEE SHEET M-1.
2. CONTRACTOR TO COORDINATE RELOCATION OF FRASIER DAM FACILITIES WITH DALLAS WATER UTILITIES. CONTACT OPERATIONS AT 214-670-8065 AT LEAST 24 HOURS PRIOR TO CONSTRUCTION. SEE SHEET M-6.
3. 54" CROSSOVER IS NOT TO BE ACTIVATED UNTIL 108" PIPELINE IS IN SERVICE.
4. CONSTRUCT ONE LENGTH (7'-6") OF 6'x11' BOX CULVERT BENEATH EXXON PIPELINE. PROTECT PIPELINE AT ALL TIMES. CONTACT EXXON AT LEAST 48 HOURS PRIOR TO CROSSING.
5. CONSTRUCTION EASEMENT HAS BEEN EXTENDED ABOVE THE TOP OF THE LEVEE TO ENABLE CONTRACTOR TO MOVE ACROSS THE CHANNEL DURING CONSTRUCTION. HOWEVER, NO EQUIPMENT OR MATERIAL WILL BE ALLOWED ON THE LEVEE.
6. CONTRACTOR SHALL FOLLOW EXXON-MOBIL PIPELINE CO. (EMPCo) REQUIREMENTS FOR CONSTRUCTION OF UTILITIES THAT CROSS THEIR EASEMENT. CONTRACTOR SHALL NOTIFY MR. MAX VANORSDOL WITH EMPCo AT (903) 654-5307 AT LEAST 72 HOURS PRIOR TO COMMENCING ANY CONSTRUCTION ACTIVITIES WITHIN THE EMPCo'S EASEMENT.

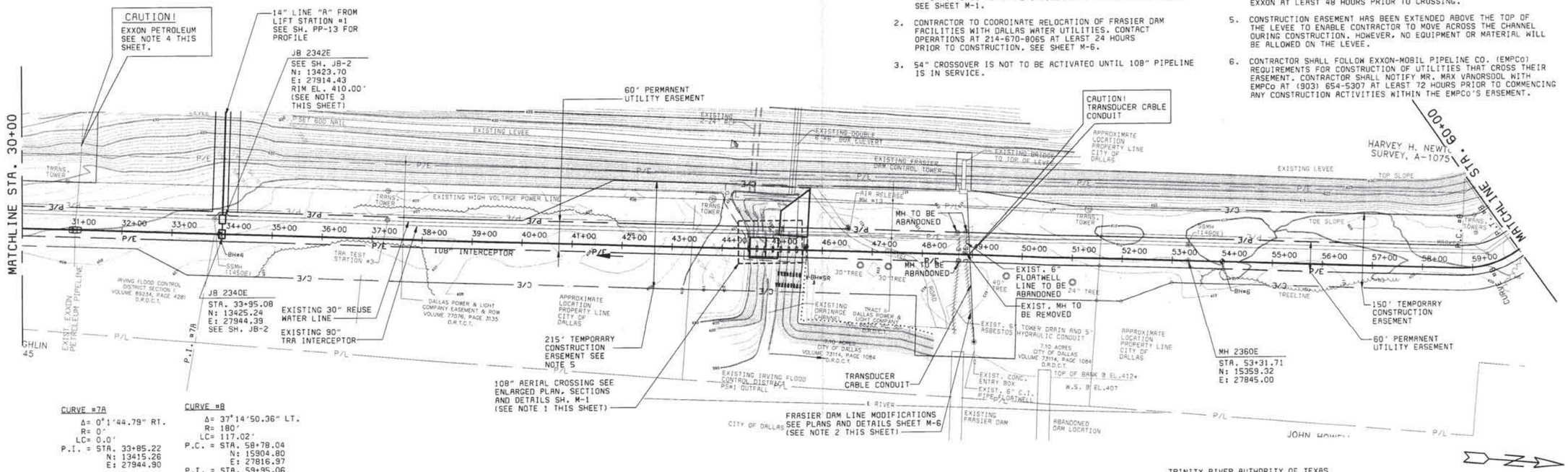

TRINITY RIVER AUTHORITY OF TEXAS
ELM FORK RELIEF INTERCEPTOR EF-2

THIS DOCUMENT IS RELEASED UNDER THE AUTHORITY OF LAYNE C. PARSONS, P.E. # 66939, FOR THE PURPOSE OF INTERIM REVIEW. THIS PRELIMINARY DOCUMENT IS NOT TO BE USED FOR CONSTRUCTION, BIDDING, OR PERMITTING PURPOSES.

DATE:
FOR REVIEW ONLY

100' 50' 0 100' 200'
1"=100'

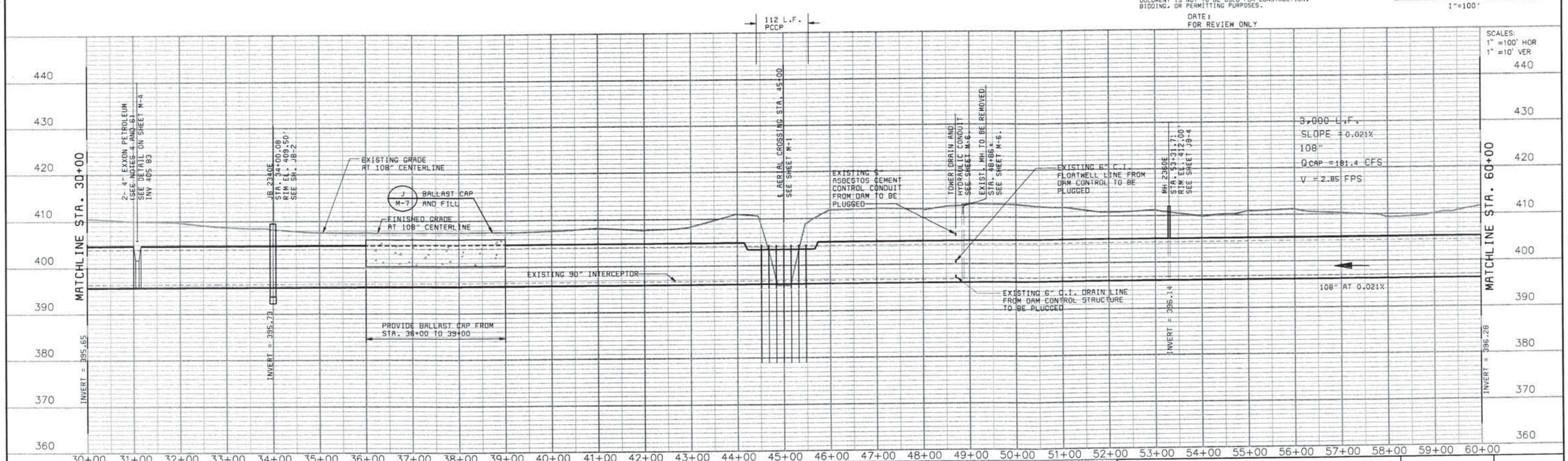

DATE	REVISIONS AND RECORD OF ISSUE	NO.	BY	CK	APP

DESIGNED CPD
DETAILED MRR, AQR
CHECKED
APPROVED
DATE

BLACK & VEATCH Building a world of difference.
Black & Veatch Corporation Dallas, Texas

BV PROJ NO 28525

Trinity River Authority of Texas
Elm Fork Relief Interceptor Segment EF-2

108" INTERCEPTOR
PLAN AND PROFILE
STA. 30+00 TO STA. 60+00

PP-2

SHEET 4 OF XX

28525-3000-WKCG-C-N0000FJHB

Date/Time, Plotted : 7/23/2008 11:17:26 AM

CURVE #9
Δ= 4°37'18.36" RT.
R= 800'
LC= 64.53'
P.C. = STA. 70+21.57
N: 16795.89
E: 27112.30
P.T. = STA. 70+86.10
N: 16846.81
E: 27072.69

CURVE #10
Δ= 5°38'15.80" LT.
R= 800'
LC= 78.72'
P.C. = STA. 72+13.01
N: 16950.04
E: 26998.87
P.T. = STA. 72+91.72
N: 17011.72
E: 26950.01

GENERAL NOTES:

1. CONTRACTOR SHALL DESIGN AND INSTALL SHORING FACILITIES SUFFICIENT TO PREVENT DAMAGE TO EXISTING BRIDGE STRUCTURE. SEE HIGHWAY CROSSING PERMIT IN THE SPECIFICATIONS.

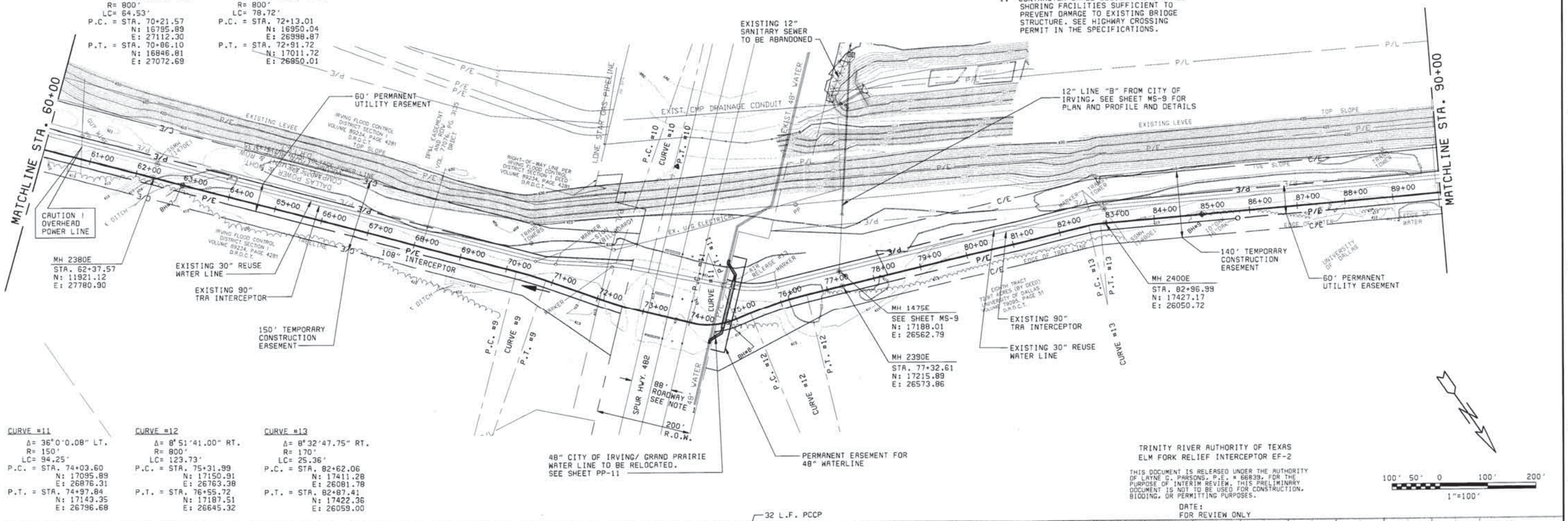

CURVE #11
Δ= 36°0'0.08" LT.
R= 150'
LC= 94.25'
P.C. = STA. 74+03.60
N: 17095.89
E: 26876.31
P.T. = STA. 74+97.84
N: 17143.35
E: 26796.68

CURVE #12
Δ= 8°51'41.00" RT.
R= 800'
LC= 123.73'
P.C. = STA. 75+31.99
N: 17150.91
E: 26763.38
P.T. = STA. 76+55.72
N: 17187.51
E: 26645.32

CURVE #13
Δ= 8°32'47.75" RT.
R= 170'
LC= 25.36'
P.C. = STA. 82+62.06
N: 17411.28
E: 26081.78
P.T. = STA. 82+87.41
N: 17422.36
E: 26059.00

TRINITY RIVER AUTHORITY OF TEXAS
ELM FORK RELIEF INTERCEPTOR EF-2

THIS DOCUMENT IS RELEASED UNDER THE AUTHORITY OF LAYNE C. PARSONS, P.E. # 66839, FOR THE PURPOSE OF INTERIM REVIEW. THIS PRELIMINARY DOCUMENT IS NOT TO BE USED FOR CONSTRUCTION, BIDDING, OR PERMITTING PURPOSES.

DATE:
FOR REVIEW ONLY

100' 50' 0 100' 200'
1"=100'

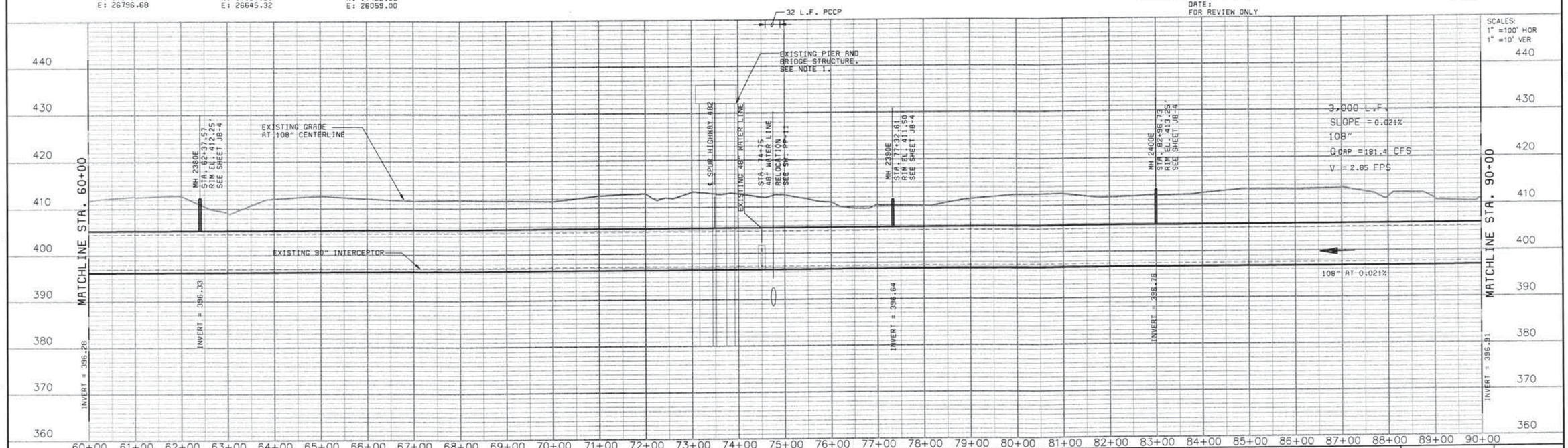

DATE	REVISIONS AND RECORD OF ISSUE	NO.	BY	CK	APP

DESIGNED CPD
DETAILED MRR,AQR
CHECKED
APPROVED
DATE

BLACK & VEATCH
Building a world of difference.
Black & Veatch Corporation
Dallas, Texas

BV PROJ NO
28525

Trinity River Authority of Texas
Elm Fork Relief Interceptor Segment EF-2

108" INTERCEPTOR
PLAN AND PROFILE
STA. 60+00 TO STA. 90+00

PP-3

SHEET
5 OF XX

28525-3000-WWCG-C-N0000FJH9 Date/Time, Plotted : 7/16/2008 10:01:24 AM

CURVE #14
Δ= 3°14'03.49" LT.
R= 800'
LC= 45.16'
P.C. = STA. 94+79.45
N: 18022.03
E: 25028.78
P.T. = STA. 95+24.61
N: 18043.63
E: 24989.13

CURVE #15
Δ= 26°48'54.24" LT.
R= 200'
LC= 93.60'
P.C. = STA. 109+00.12
N: 18667.43
E: 23763.20
P.T. = STA. 109+93.73
N: 18689.18
E: 23673.04

GENERAL NOTES:

1. CONTRACTOR TO PROTECT IFCD CONCRETE STRUCTURE. CONTRACTOR MAY REMOVE AND REPLACE CONCRETE APRON AT HIS OPTION.
2. PROVIDE BALLAST CAP FROM STA. 91+00 TO 103+00. EARTH FILL TO BE TAPERED TO EDGE OF PERMANENT UTILITY EASEMENT.
3. CONTRACTOR TO COORDINATE CONSTRUCTION OF LINE "D" AND ABANDONMENT OF EXISTING 12" VCP WITH THE CITY OF IRVING.
4. CONTRACTOR SHALL DESIGN AND INSTALL SHORING FACILITIES SUFFICIENT TO PREVENT DAMAGE TO EXISTING BRIDGE STRUCTURE. SEE HIGHWAY CROSSING PERMIT IN THE SPECIFICATIONS.

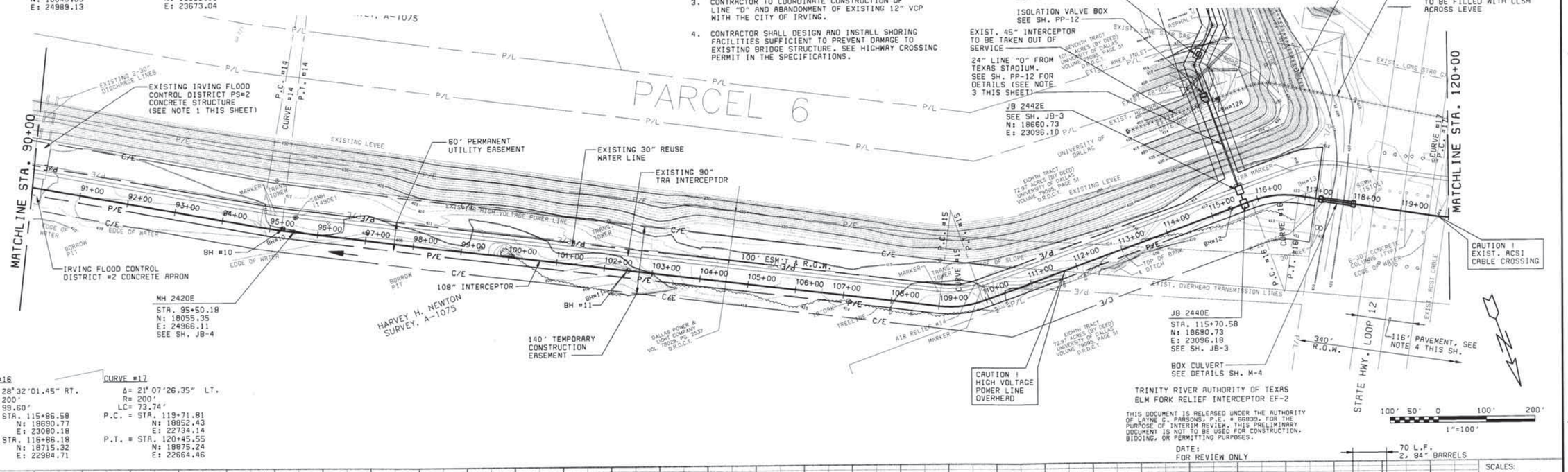

CURVE #16
Δ= 28°32'01.45" RT.
R= 200'
LC= 99.60'
P.C. = STA. 115+86.58
N: 18690.77
E: 23080.18
P.T. = STA. 116+86.18
N: 18715.32
E: 22984.71

CURVE #17
Δ= 21°07'26.35" LT.
R= 200'
LC= 73.74'
P.C. = STA. 119+71.81
N: 18852.43
E: 22734.14
P.T. = STA. 120+45.55
N: 18875.24
E: 22664.46

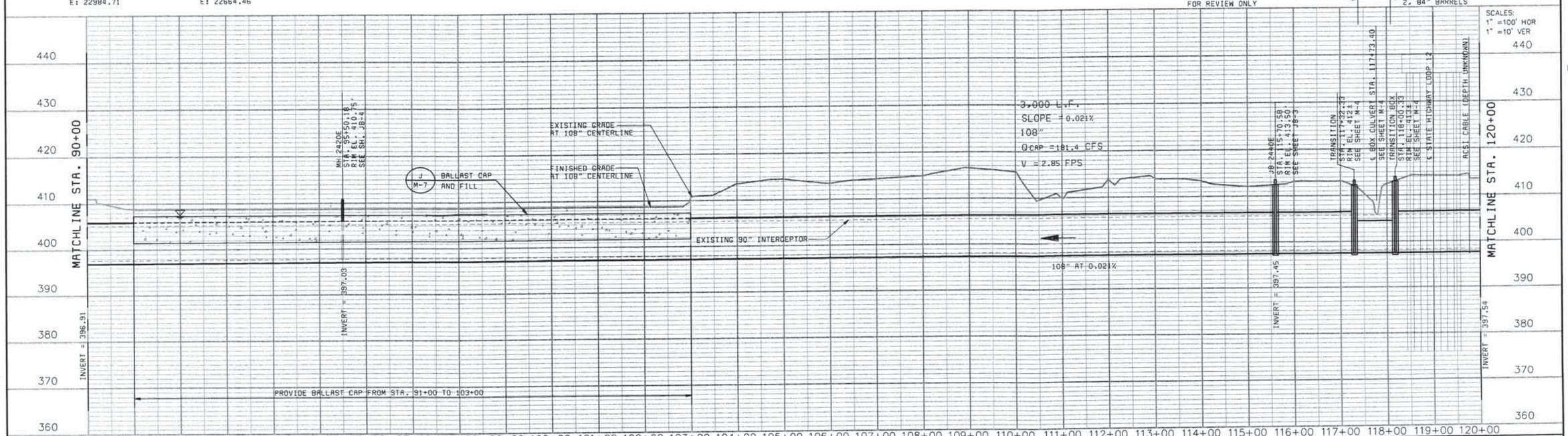

DATE	REVISIONS AND RECORD OF ISSUE	NO.	BY	CK	APP

DESIGNED CPD
DETAILED MRR, AQR
CHECKED
APPROVED
DATE

BLACK & VEATCH Building a world of difference.
Black & Veatch Corporation
Dallas, Texas

BV PROJ NO 28525

Trinity River Authority of Texas
Elm Fork Relief Interceptor Segment EF-2

108" INTERCEPTOR
PLAN AND PROFILE
STA. 90+00 TO STA. 120+00

PP-4
SHEET 6 OF XX

28525-3000-NWCG-C-N0000FJHB Date/Time, Plotted : 12/19/2006 2:59:14 PM

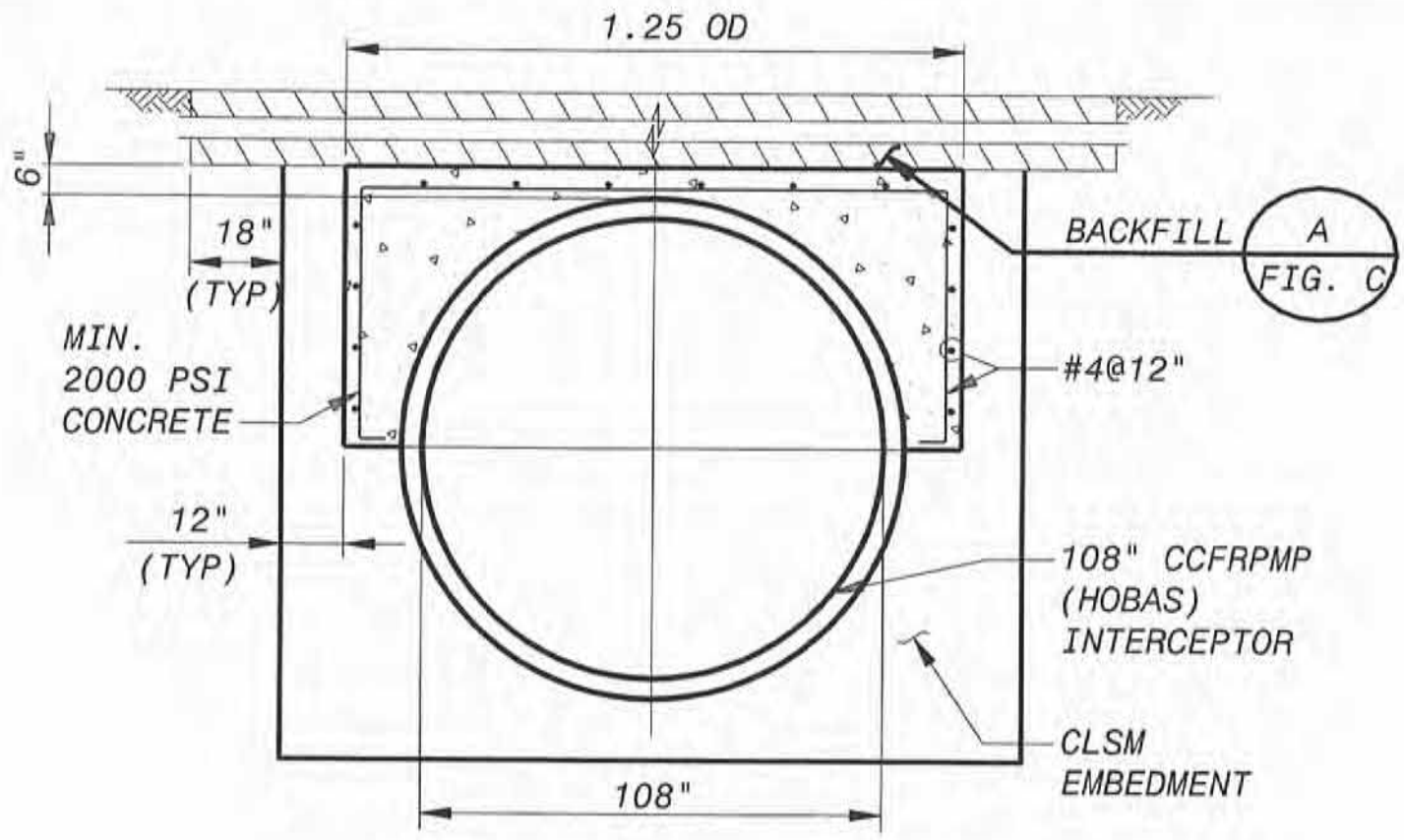

BALLAST CAP AND FILL DETAIL

NO SCALE (SEE NOTE 1)

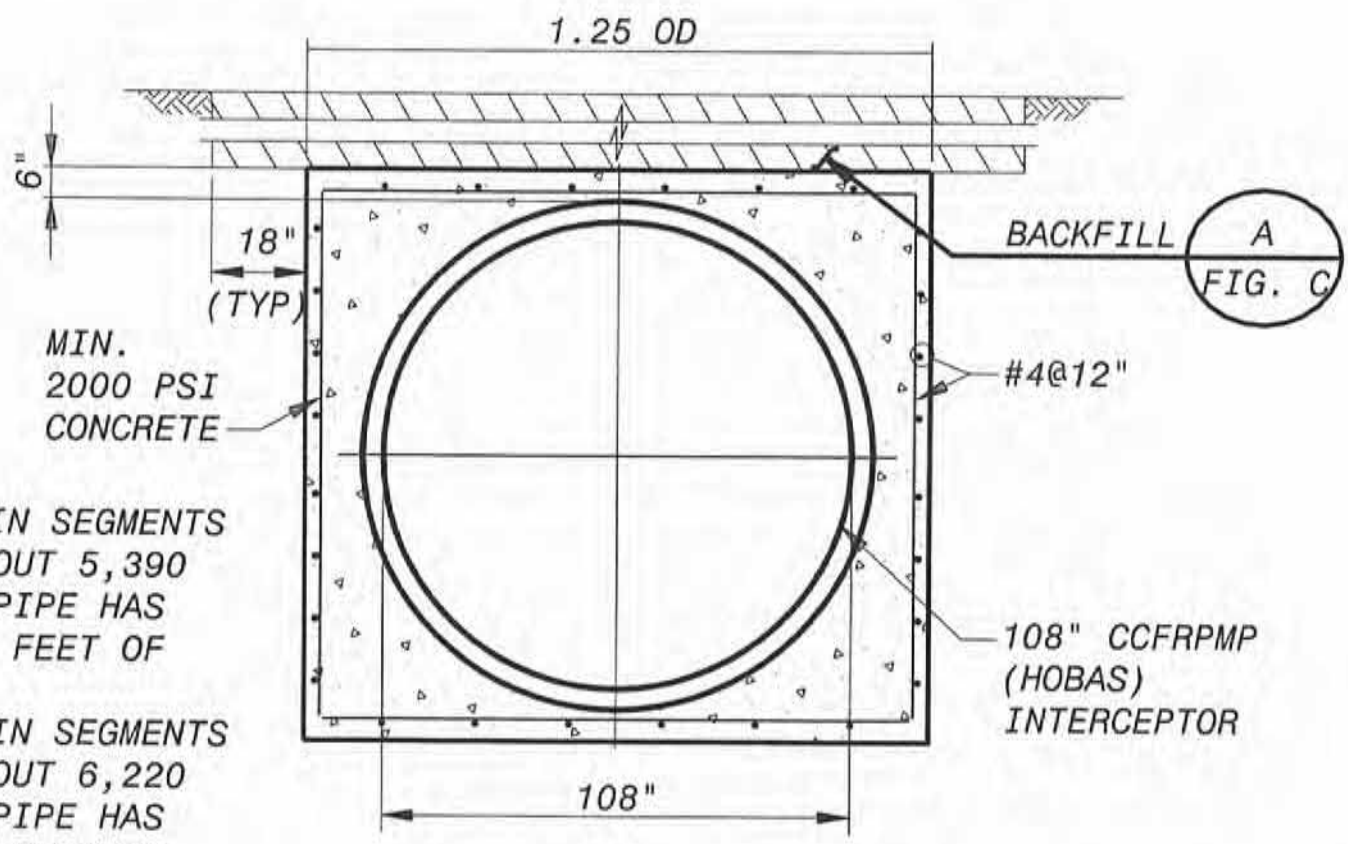

NOTES:

1. TO BE USED IN SEGMENTS TOTALING ABOUT 5,390 FEET WHERE PIPE HAS MORE THAN 4 FEET OF COVER.
2. TO BE USED IN SEGMENTS TOTALING ABOUT 6,220 FEET WHERE PIPE HAS LESS THAN 4 FEET OF COVER.

FULL ENCASEMENT AND FILL DETAIL

NO SCALE (SEE NOTE 2)

BLACK & VEATCH Corporation Dallas, Texas	TRINITY RIVER AUTHORITY OF TEXAS ELM FORK RELIEF INTERCEPTOR SEGMENT EF-2	PROJECT 136281
	HOBAS PIPE BID ALTERNATIVE 108" INTERCEPTOR TRENCHING AND BACKFILLING	FIGURE A

A5025

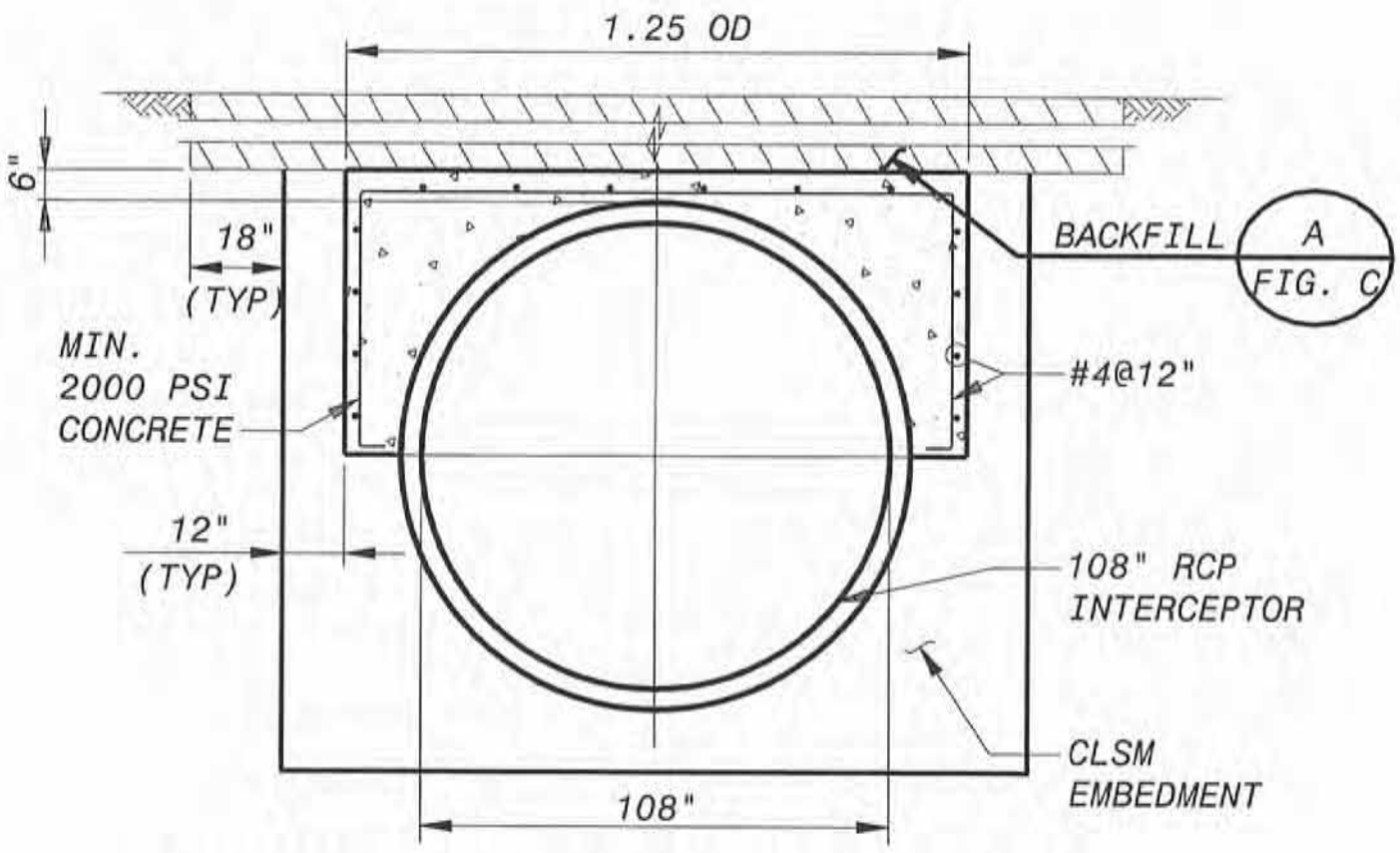

BALLAST CAP AND FILL DETAIL

NO SCALE (SEE NOTE 1)

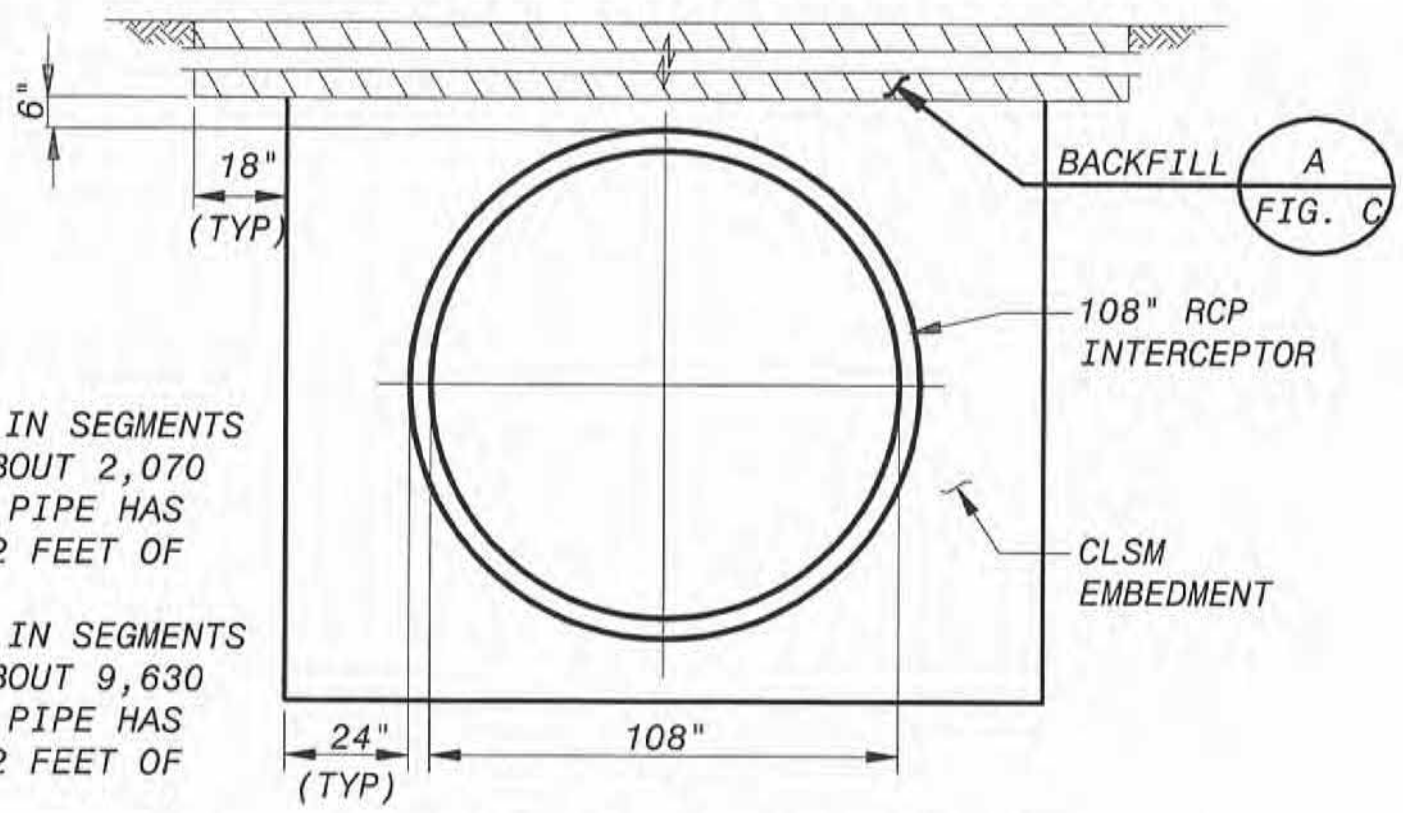

NOTES:

1. TO BE USED IN SEGMENTS TOTALING ABOUT 2,070 FEET WHERE PIPE HAS LESS THAN 2 FEET OF COVER.
2. TO BE USED IN SEGMENTS TOTALING ABOUT 9,630 FEET WHERE PIPE HAS MORE THAN 2 FEET OF COVER.

EMBEDMENT AND FILL DETAIL

NO SCALE (SEE NOTE 2)

BLACK & VEATCH Corporation Dallas, Texas	TRINITY RIVER AUTHORITY OF TEXAS ELM FORK RELIEF INTERCEPTOR SEGMENT EF-2	PROJECT 136281
	RCP PIPE BID ALTERNATIVE 108" INTERCEPTOR TRENCHING AND BACKFILLING	FIGURE B

A5025

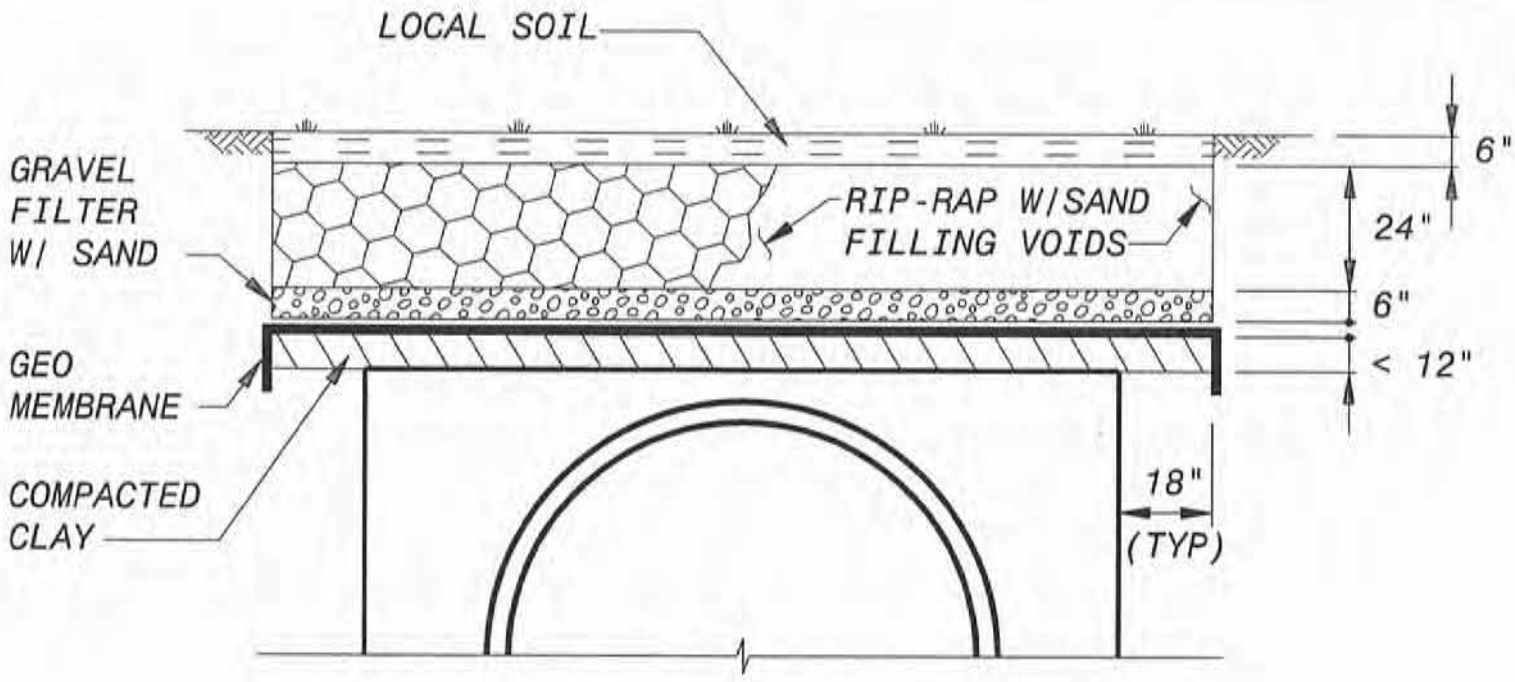

FOR SHALLOW INSTALLATION

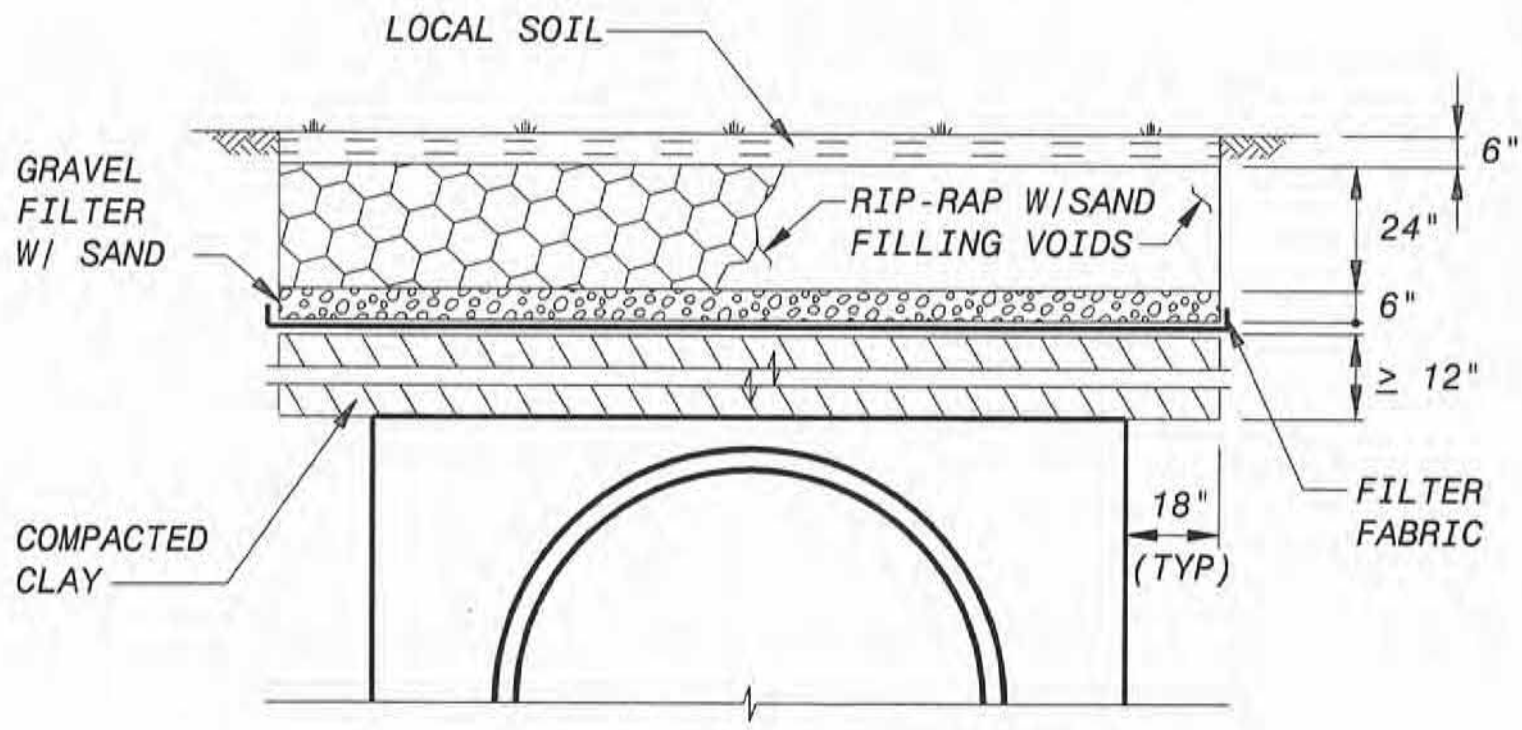

FOR DEEPER INSTALLATION

BACKFILL DETAIL

NO SCALE

A
-

BLACK & VEATCH Corporation Dallas, Texas	TRINITY RIVER AUTHORITY OF TEXAS ELM FORK RELIEF INTERCEPTOR SEGMENT EF-2	PROJECT 136281
	TRENCH BACKFILL DETAIL 108" INTERCEPTOR TRENCHING AND BACKFILLING	FIGURE C

A5025